# V60 Anesthetic Vaporizer

# Operator’s Manual

© 2009-2016 Shenzhen Mindray Bio-Medical Electronics Co., Ltd. All rights Reserved.
For this Operator's Manual, the issue date is September, 2016.

# Intellectual Property Statement

SHENZHEN MINDRAY BIO-MEDICAL ELECTRONICS CO., LTD. (hereinafter called Mindray) owns the intellectual property rights to this Mindray product and this manual. This manual may refer to information protected by copyright or patents and does not convey any license under the patent rights or copyright of Mindray, or of others.

Mindray intends to maintain the contents of this manual as confidential information. Disclosure of the information in this manual in any manner whatsoever without the written permission of Mindray is strictly forbidden. Release, amendment, reproduction, distribution, rental, adaptation, translation or any other derivative work of this manual in any manner whatsoever without the written permission of Mindray is strictly forbidden.

mindray, MINDRAY and MINDRAY are the trademarks, registered or otherwise, of Mindray in China and other countries.

All other trademarks that appear in this manual are used only for editorial purposes without the intention of improperly using them. They are the property of their respective owners.

# Manufacturer's Responsibility

Contents of this manual are subject to change without prior notice.

All information contained in this manual is believed to be correct. Mindray shall not be liable for errors contained herein or for incidental or consequential damages in connection with the furnishing, performance, or use of this manual.

Mindray is responsible for the effects on safety, reliability and performance of this product, only if:

- all installation operations, expansions, changes, modifications and repairs of this product are conducted by Mindray authorized personnel;
- the electrical installation of the relevant room complies with the applicable national and local requirements;and
- the product is used in accordance with the instructions for use.

**⚠ WARNING**

- **This Anesthetic Vaporizer must be operated by skilled/trained clinical professionals.**
- **It is important for the hospital or organization that uses this equipment perform a reasonable service/maintenance plan. Neglecting this may result in machine breakdown or personal injury.**

# Warranty

THIS WARRANTY IS EXCLUSIVE AND IS IN LIEU OF ALL OTHER WARRANTIES, EXPRESSED OR IMPLIED, INCLUDING WARRANTIES OF MERCHANTABILITY OR FITNESS FOR ANY PARTICULAR PURPOSE.

## Exemptions

Mindray's obligation or liability under this warranty does not include any transportation or other charges or liability for direct, indirect or consequential damages or delay resulting from the improper use or application of the product or the use of parts or accessories not approved by Mindray or repairs by people other than Mindray authorized personnel.

This warranty shall not extend to:

- Malfunction or damage caused by improper use or man-made failure.
- Malfunction or damage caused by unstable or out-of-range power input.
- Malfunction or damage caused by major forces such as fire and earthquake.
- Malfunction or damage caused by improper operation or repair by unqualified orunauthorized service people.
- Malfunction of the instrument or part whose serial number is not legible enough.
- Others not caused by instrument or part itself.

# Customer Service Department


| | |
|---|---|
| Manufacturer: | Shenzhen Mindray Bio-Medical Electronics Co., Ltd. |
| Address: | Mindray Building,Keji 12th Road South,High-tech industrial park,Nanshan,Shenzhen 518057,P.R.China |
| Website: | www.mindray.com |
| E-mail Address: | service@mindray.com |
| Tel: | +86 755 81888998 |
| Fax: | +86 755 26582680 |
| | |
| EC-Representative: | Shanghai International Holding Corp. GmbH(Europe) |
| Address: | Eiffestraβe 80, 20537 Hamburg, GERMANY |
| Tel: | 0049-40-2513175 |
| Fax: | 0049-40-255726 |

# Table of Contents

**1 Safety ..... 1-1**
1.1 Safety Information ..... 1-1
1.1.1 Warnings ..... 1-2
1.1.2 Cautions ..... 1-3
1.1.3 Notes ..... 1-3
1.2 Anesthetic Vaporizer Symbols ..... 1-4

**2 The Basics ..... 2-1**
2.1 Product Description ..... 2-1
2.2 Intended Use ..... 2-2
2.3 Anesthetic Vaporizer Appearance ..... 2-2
2.3.1 Front View ..... 2-2
2.3.2 Rear View ..... 2-3
2.4 Configuration Differences ..... 2-4

**3 Method of Operation ..... 3-1**
3.1 Control Dial ..... 3-1
3.2 Connecting and Interlock System ..... 3-1
3.2.1 Plug-in Adapter/Plug-in Connector ..... 3-2
3.2.2 Interlock Device ..... 3-4
3.3 Filling System ..... 3-5

**4 Filling and Draining ..... 4-1**
4.1 Checks before Filling ..... 4-1
4.2 Filling the Vaporizer ..... 4-1
4.2.1 Pour Fill System ..... 4-3
4.2.2 Key Filler System ..... 4-6
4.2.3 Quik-Fil System ..... 4-11
4.3 Draining the Vaporizer ..... 4-13
4.3.1 Pour Fill System ..... 4-13
4.3.2 Key Filler System ..... 4-16
4.3.3 Quik-Fil System ..... 4-19
4.4 Blowing off the Vaporizer ..... 4-20

**5 Checks before Use ..... 5-1**
5.1 Checklist—checks before each use ..... 5-1
5.2 Setting Checks ..... 5-2

**6 Basic Operations ..... 6-1**
6.1 Connecting the Vaporizer ..... 6-1
6.2 Adjusting the Concentration of Anesthetic Agent ..... 6-4

6.3 Switching off the Vaporizer ..... 6-6
6.4 Disconnecting the Vaporizer ..... 6-6
6.5 Moving when Filled ..... 6-7

**7 Cleaning and Disinfecting ..... 7-1**
7.1 Cleaning ..... 7-1
7.2 Disinfecting ..... 7-2

**8 User Maintenance ..... 8-1**
8.1 Repair Policy ..... 8-1
8.2 Maintenance Schedule ..... 8-2
8.3 Checking the Concentration ..... 8-2
8.4 Checking the Filling System ..... 8-4
8.5 Checking the Plug-in Adapter ..... 8-4

**9 Troubleshooting ..... 9-1**
9.1 Operation Related Faults and Remedies ..... 9-1
9.2 Filling and Draining Related Faults and Remedies ..... 9-3
9.3 Plug-in Adapter Related Faults and Remedies ..... 9-3

**10 Storage and Transport ..... 10-1**
10.1 Storage ..... 10-1
10.2 Transport ..... 10-2

**11 Theory of Operation ..... 11-1**
11.1 Operating Principle ..... 11-1
11.2 Calibration ..... 11-3
11.3 Influence of Temperature ..... 11-3
11.4 Influence of Flow ..... 11-6
11.5 Influence of Gas Composition ..... 11-8
11.6 Influence of Atmospheric Pressure ..... 11-9
11.7 Influence of Fluctuations in Pressure ..... 11-9
11.8 Influence of Running Time ..... 11-10

**A Product Specifications ..... A-1**
A.1 Standards Compliance ..... A-1
A.2 Physical Specifications ..... A-1
A.3 Operating Range ..... A-2
A.4 Performance Specifications ..... A-2
A.5 Product Configurations ..... A-3
A.6 Flow Range ..... A-3

**B Accessories List ..... B-1**

**C Symbols and Terminology ..... C-1**
C.1 Symbols.....C-1
C.2 Terminology .....C-1

**FOR YOUR NOTES**

# 1 Safety

## 1.1 Safety Information

### ⚠WARNING

- **Indicates a potential hazard or unsafe practice that, if not avoided, could result in death or serious injury.**

### ⚠CAUTION

- **Indicates a potential hazard or unsafe practice that, if not avoided, could result in minor personal injury or product/property damage.**

### NOTE

- **Provides application tips or other useful information to ensure that you get the most from your product.**

### 1.1.1 Warnings

**⚠WARNING**

- **Do not operate the Anesthetic Vaporizer before reading this manual.**
- **The user of the Anesthetic Vaporizer must fully understand and strictly follow the instructions for use.**
- **Before putting the system into operation, the user must verify that the Anesthetic Vaporizer is in correct working order and operating condition.**
- **Do not use the Anesthetic Vaporizer in the environment outside the specified temperature and pressure ranges.**
- **To avoid explosion hazard, do not use the Anesthetic Vaporizer in the presence of flammable anesthetic agent, vapors or liquids.**
- **Dispose of the package material, observing the applicable waste control regulations and keep them out of children's reach.**
- **To avoid explosion hazard, use only specified non-combustible anesthetic agent in compliance with the requirement of ISO80601-2-13.**
- **Any unauthorized organization or untrained person must not change or disassemble the Anesthetic Vaporizer.**
- **This Anesthetic Vaporizer may not be modified without the manufacturer's permission.**
- **The medical device must be inspected and serviced regularly by service personnel.**
- **Before use, check that the shipping package is intact.**
- **The Anesthetic Vaporizer shall not be serviced or maintained while in use with a patient.**
- **Do not use the Anesthetic Vaporizer when there is an anesthetic agent leak..**
- **The vaporizer is designed for use only with the specific anesthetic agent named on the filler block (and further indicated by labels of different colors). Do not use the vaporizer if the vaporizer is filled with any agent other than the agent specified on the front label.**
- **This Anesthetic Vaporizer is not suitable for use in an MRI environment.**

## 1.1.2 Cautions

### ⚠CAUTION

- **Use only accessories specified in this manual.**
- **At the end of its service life, the Anesthetic Vaporizer, as well as its accessories, must be disposed of in compliance with the guidelines regulating the disposal of such products.**
- **The Anesthetic Vaporizer may become unstable if the unit is tilted beyond 10 degrees.**
- **Always install or carry the Anesthetic Vaporizer properly to avoid damage caused by drop, impact, strong vibration or other mechanical force. Do not carry by the control dial or the handle for locking lever.**

## 1.1.3 Notes

### NOTE

- **Keep this manual close to the Anesthetic Vaporizer so that it can be obtained conveniently when needed.**
- **This manual describes all features and options. Your Anesthetic Vaporizer may not have all of them.**
- **This product is latex free.**

## 1.2 Anesthetic Vaporizer Symbols

| | |
|---|---|
| | Refer to instruction manual/booklet |
| | Gas flow direction |
| | Adjust concentration as the arrow shows |
| | Press and lock as the arrow shows |
| | Caution |
| | MR Unsafe – do not subject to magnatuc resonance imaging (MRI) |
| EAC | Unified circulation mark indicates that products marked them passed all specified in the technical regulations of the Customs Union of the procedure for the assessment (confirmation) of conformity and complies with the requirements applicable to all the products technical regulations of the Customs Union. |

# 2 The Basics

## 2.1 Product Description

This vaporizer is an unheated, calibrated anaesthetic vaporizer outside the circuit. It is used jointly with the fresh gas delivery system and provides accurate concentration of anaesthetic agent through the control dial.

Each vaporizer is calibrated for a specified anesthetic agent and is only suitable for that anesthetic agent. The specific agent that the vaporizer must be used with is marked in text and by specific color on the vaporizer.

The vaporizer provides the function of temperature, air pressure and flow compensations. Therefore, under the circumstances specified in this manual, the output concentration of the vaporizer is not influenced by ambient conditions, such as temperature, gas flow and ventilation pressure.

The Anesthetic Vaporizer is not suitable for use with an anesthetic delivery system with vaporizer placed inside the circuit system due to relatively high internal pneumatic resistance.

The vaporizer delivery system is in compliance with ISO80601-2-13.

The Key Filler system is in compliance with ISO5360.
Quik-Fil system complies with the performance data of ISO5360.

Mindray recommends that the output concentration is monitored through an anesthetic gas monitoring device in compliance with ISO80601-2-55 to detect any hazardous output values.

Use an anesthetic gas scavenging system in compliance with ISO80601-2-13 to minimize atmospheric pollution in the operating room.

**⚠WARNING**

- **Do not use the Anesthetic Vaporizer in mobile vehicles, aeroplanes, helicopters and ships.**

## 2.2 Intended Use

V60 anesthetic vaporizer is an unheated, calibrated anesthetic vaporizer used for evaporating liquid anesthetic agents and delivering mixed gas of controlled concentration to an anesthetic delivery system.

It is available in Isoflurane, Sevoflurane, Enflurane and Halothane variants.

**⚠WARNING**

- **The Anesthetic Vaporizer is intended to be operated only by licensed clinicians and qualified anesthesia personnel who have received adequate training in its use. Anyone unauthorized or untrained must not perform any operation on the Anesthetic Vaporizer.**
- **This Anesthetic Vaporizer is not suitable for use in an MRI environment.**

## 2.3 Anesthetic Vaporizer Appearance

### 2.3.1 Front View

1. “0” button
2. Control dial
3. Filling system
4. Color mark for anesthetic agent
5. Sight glass for filling level
6. Drainage knob

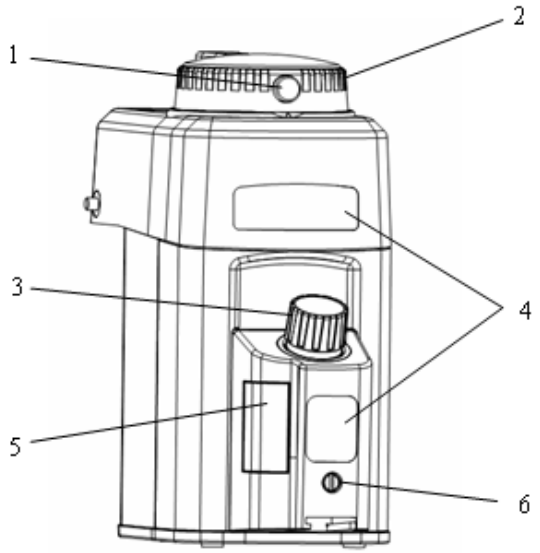

## 2.3.2 Rear View

1. Handle for locking lever
2. Interlock system
3. Locking pin

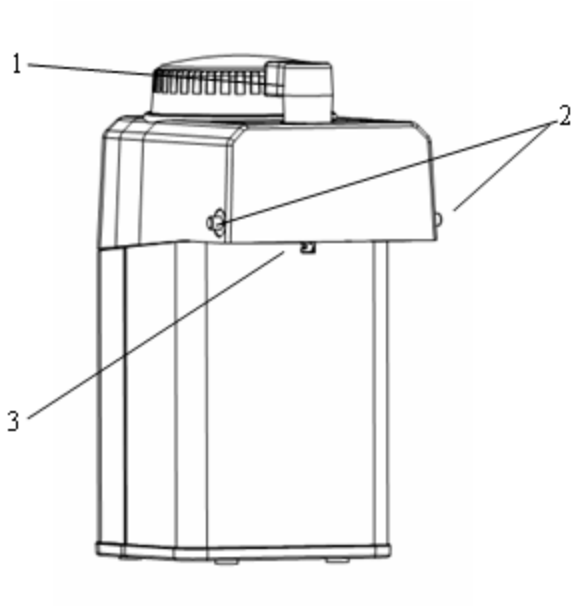

## 2.4 Configuration Differences

| Model | Anesthetic agent | Filling system | Accessory |
|---|---|---|---|
| Sevoflurane Key Filler Vaporizer | Sevoflurane | Key Filler system | Sevoflurane Key Filler filling adapter |
| Isoflurane Key Filler Vaporizer | Isoflurane | Key Filler system | Isoflurane Key Filler filling adapter |
| Sevoflurane Quik-Fil Vaporizer | Sevoflurane | Quik-Fil system | Sevoflurane Quik-Fil filling adapter<br>Sevoflurane Quik-Fil drainage funnel |
| Sevoflurane Pour Fill Vaporizer | Sevoflurane | Pour Fill system | / |
| Enflurane Key Filler Vaporizer | Enflurane | Key Filler system | / |
| Enflurane Pour Fill Vaporizer | Enflurane | Pour Fill system | Enflurane Key Filler filling adapter |
| Halothane Key Filler Vaporizer | Halothane | Key Filler system | / |
| Halothane Pour Fill Vaporizer | Halothane | Pour Fill system | Halothane Key Filler filling adapter |
| Sevoflurane Key Filler Vaporizer | Sevoflurane | Key Filler system | / |

# 3 Method of Operation

## 3.1 Control Dial

The control dial is used to set the output concentration of the anesthetic agent. The control dial is marked with output concentration of the anesthetic agent from the vaporizer. The graduation to which the dial is turned indicates the output concentration.

The “0” button on the vaporizer has locking function. Press this button first before turning the control dial.

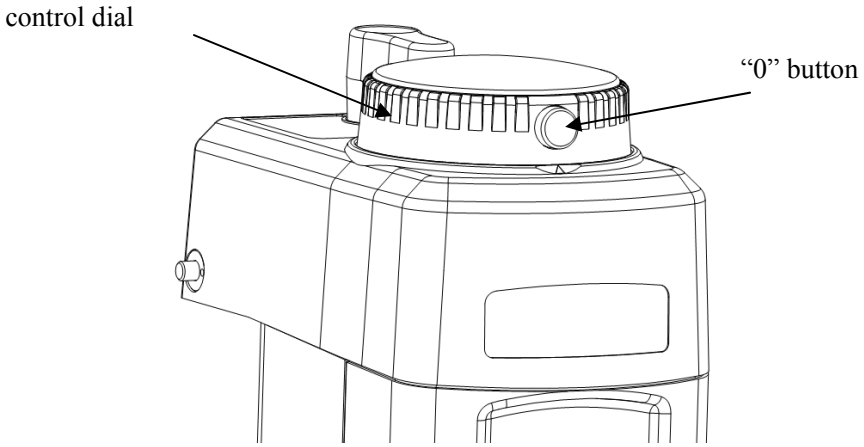


If the vapour is stored in high temperature and then used, the concentration of the delivered anesthetic agent may be high. To enable pressure equalization, always turn the control dial to 1% after connecting the anesthetic workstation, and wait for at least 15 seconds.

## 3.2 Connecting and Interlock System

When the anesthetic delivery system is connected to multiple vaporizers, the interlock systems of the vaporizers ensure that only one vaporizer can be switched on at any one time while the others are switched off and blocked.

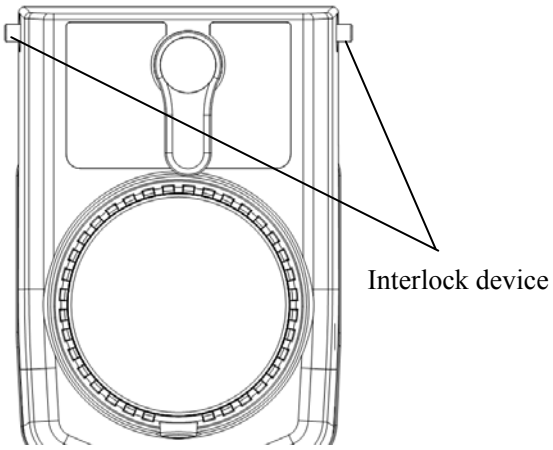


## 3.2.1 Plug-in Adapter/Plug-in Connector

The vaporizer is applicable to anesthetic delivery systems with plug-in connectors with an Ohmeda Selectatec® compatible manifold system.

The holes in the plug-in adapter on the vaporizer fit onto the pins on the plug-in connector on the anesthetic delivery system.

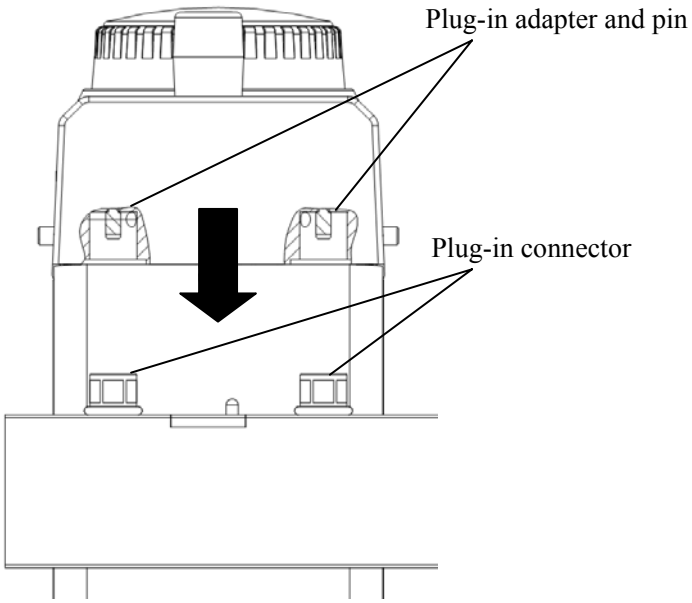

To connect/disconnect the vaporizer, the control dial must be at the “0” setting indicating locked status.

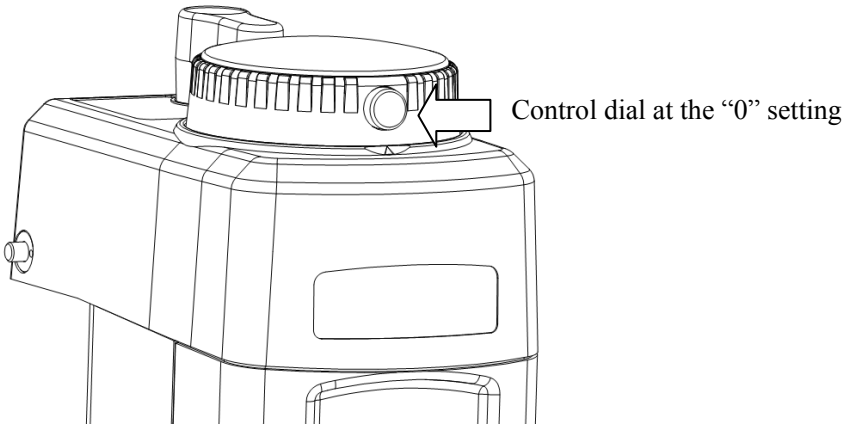


Press the handle for locking lever and turn the handle clockwise for 90° to lock the vaporizer and counter clockwise for 90° to release locking.

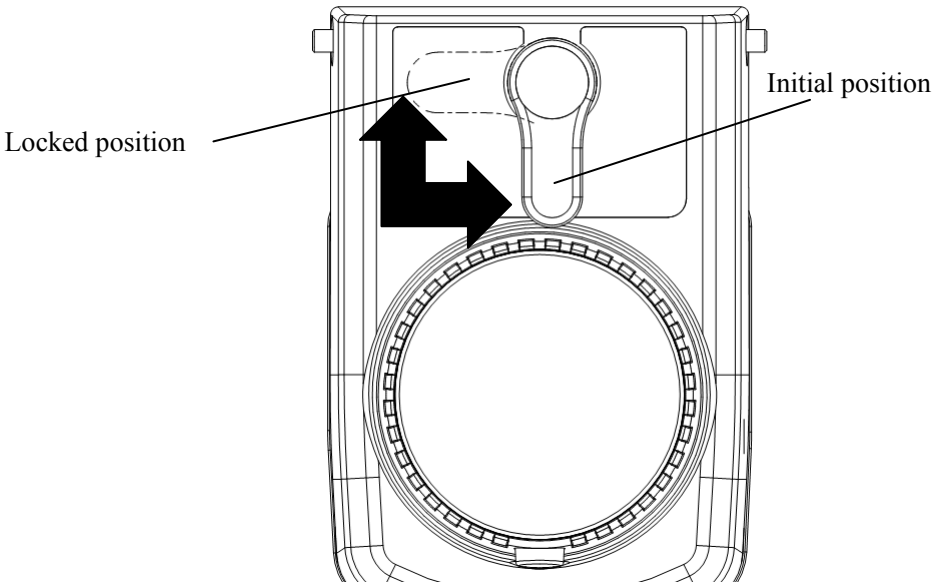

## 3.2.2 Interlock Device

Ohmeda Selectatec® compatible interlock device is used. When the anesthetic delivery system is connected to multiple vaporizers, if one vaporizer is switched on, the two pins on the interlock device are pushed out, preventing other vaporizers from being switched on.

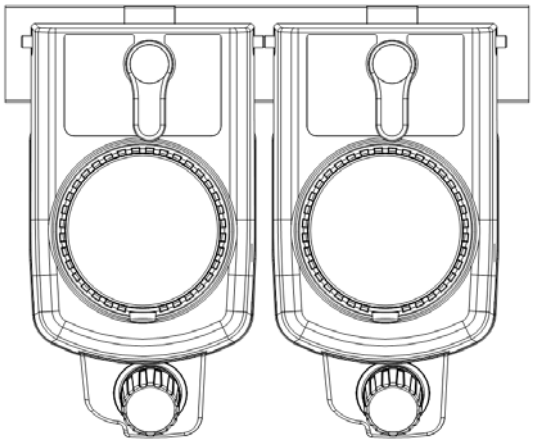

### ⚠WARNING

- **Before operation, check if the interlock device is fully functional..**
- **A malfunction in the interlock system can endanger the patient by overdosing or mixing anesthetic agents.**

### NOTE

- **To ensure the normal operation of the vaporizer, connect the vaporizer in the correct flow direction corresponding with the arrows on the Anesthetic Vaporizer.**
- **When the anesthetic delivery system has three and more than three groups of plug-in connectors, check if there is an interlock function between nonadjacent connectors. Otherwise, vaporizers are recommended to be connected right next to each other.**

## 3.3 Filling System

The filling system is used to fill and drain the specific anesthetic agent. The filling system has a liquid level indicator which displays filling level with the maximum and minimum levels marked.

- Pour Fill system

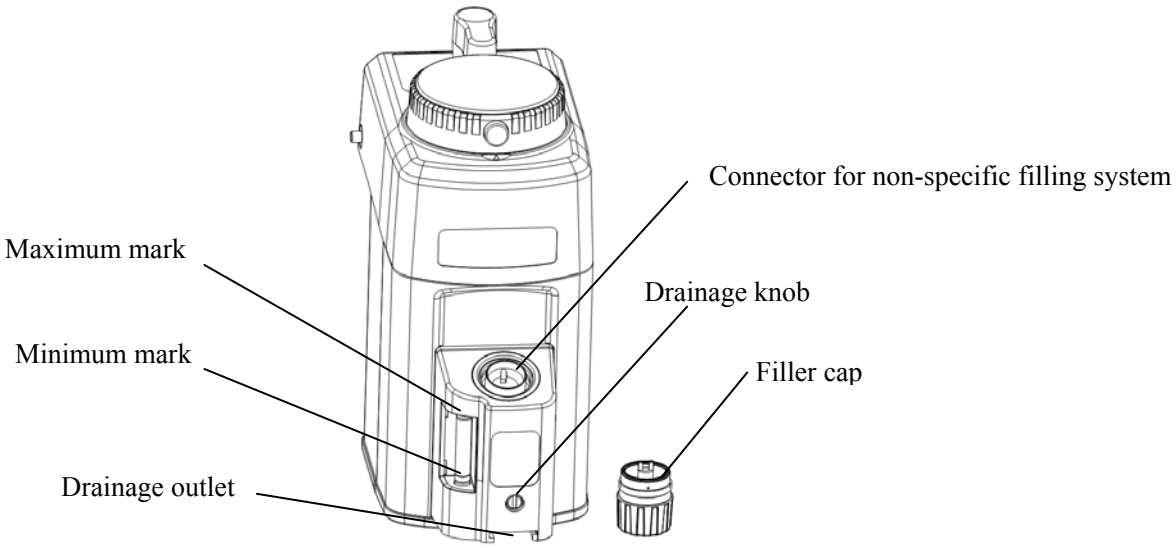


- Key Filler system

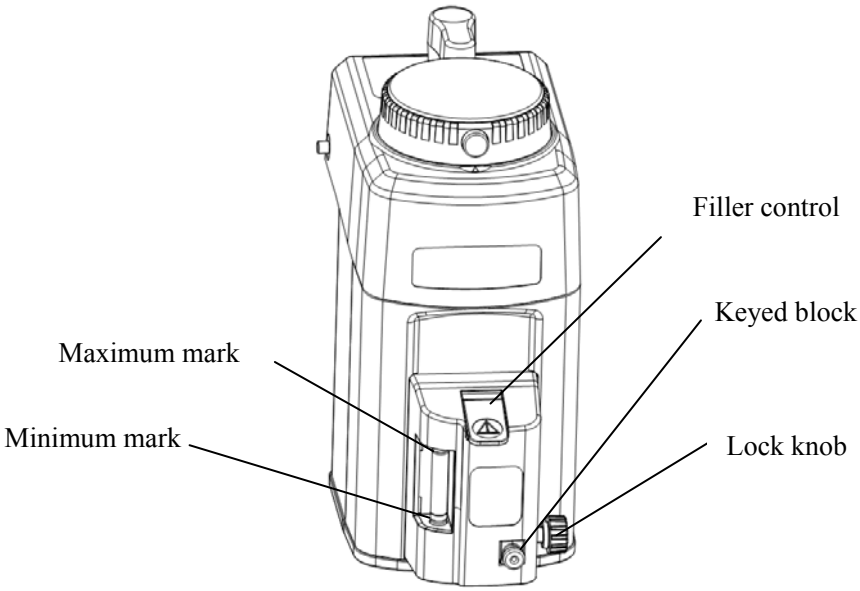

■ Quik-Fil system

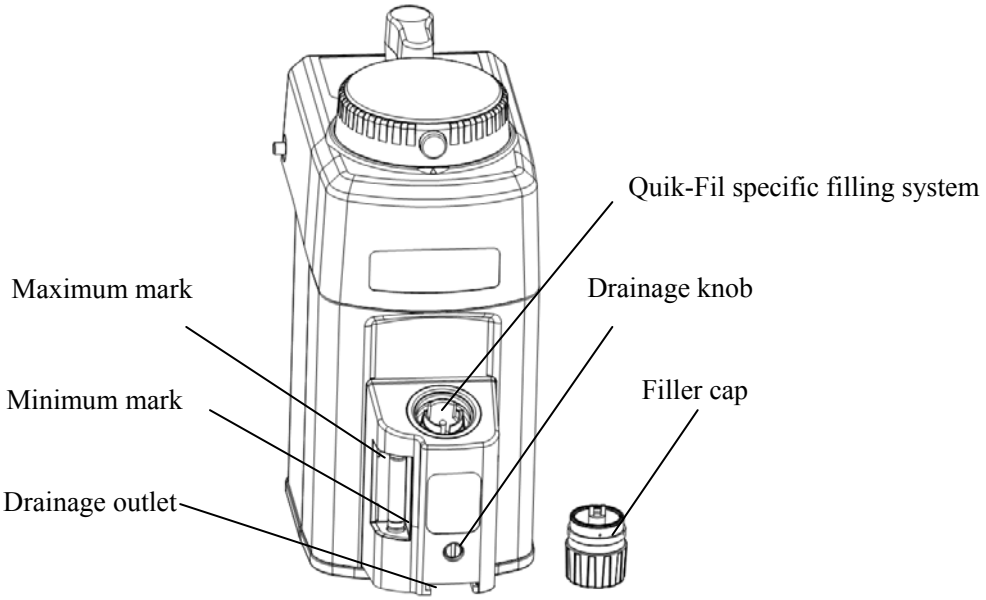

# 4 Filling and Draining

## 4.1 Checks before Filling

1. Check the vaporizer for damage.
2. Set the control dial to “0” position.
3. Observe use-by date for anesthetic agent.
4. Use on anesthetic delivery systems made by other manufacturers only after a functional system check for geometry, leakage, pressure and flow has been carried out by trained service personnel (on each type of anesthetic delivery system).
5. After filling for the first time, wait 15 minutes for the dry wicks inside to become saturated (The filling level of the anesthetic agent may drop. Refill if required.)

### NOTE

- **The Anesthetic Vaporizer may only be used on the anesthetic delivery system after the operating organization has checked all technical specifications of the Vapor and the anesthesia system are met. Any deviations might result in incorrect concentrations being delivered.**

## 4.2 Filling the Vaporizer

### ⚠WARNING

- **Only fill the vaporizer with the anesthetic agent specified on it.**

### ⚠CAUTION

- **Take care not to spill anesthetic agent. Inhaling anesthetic agent vapor endangers health.**

## NOTE

- **Mindray recommends the use of Key Filler or Quik-Fil filling systems to prevent incorrect filling and to reduce the volume of anesthetic agent vapor released during the filling process.**
- **Ensure adequate ambient ventilation when filling the vaporizer.**

Before use, check that the correct anesthetic agent is used. For instance, check the name of anesthetic agent and color mark on the vaporizer and the anesthetic agent bottle.

| | |
|---|---|
| Enflurane | Orange |
| Isoflurane | Purple |
| Sevoflurane | Yellow |
| Halothane | Red |

From a technical viewpoint, the same anesthetic agent from different manufacturers with different tradenames, which are identical in composition and physical and chemical properties and are approved as medicaments, can be administered in combination in the vaporizer and monitored with anesthetic agent monitor.

## ⚠WARNING

- **Stop using a vaporizer immediately which has been filled or partly filled with the wrong anesthetic agent or other substance to prevent danger to health. If this occurs, mark the vaporizer for incorrect filling and call the distributor for repair.**
- **Use anesthetic agent monitors in compliance with ISO80601-2-55. Many anesthetic agent monitors do not identify mixtures of anesthetic agents and/or detect that the anesthetic agent being measured differs from the agent that was set. Unusual deviations in the concentration displayed on a monitor may indicate incorrect filling. If this has happened, mark the vaporizer and call the distributor for repair.**

## ⚠CAUTION

- **Make sure that the drainage knob is closed when filling the vaporizer as anesthetic agent may escape from the drainage outlet if it is not closed.**
- **Keep the vaporizer upright or hanging vertical while it is being filled. If it is at an angle it can be overfilled which may lead to concentrations which are too high or too low.**
- **During disconnection of Key Filler and Quik-Fil filling adaptor from the vaporizer and the bottle adaptor from the bottle, small amounts of anesthetic agent will escape to the environment.**

### 4.2.1 Pour Fill System

The filling steps of V60 Isoflurane Pour Fill Vaporizer and V60 Sevoflurane Pour Fill Vaporizer are the same.

If the vaporizer is connected to the anesthetic delivery system, fresh gas flow can remain as set.

1. Turn the control dial clockwise back to “0” position until the “0” button pops up.

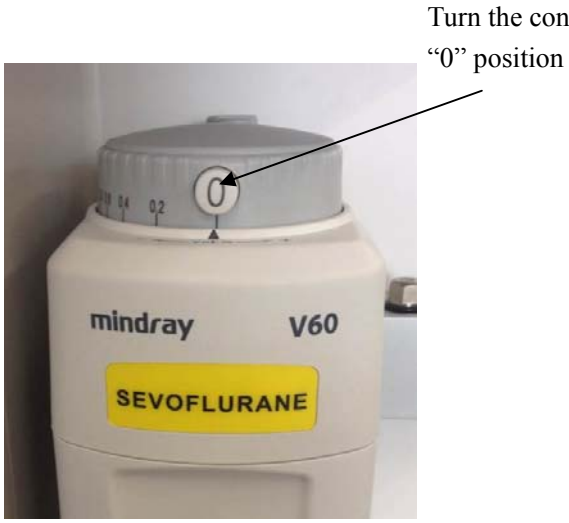


## ⚠WARNING

- **Significant quantities of anesthetic agent vapor may escape if the control dial does not return to “0” position.**

## ⚠CAUTION

- **It is necessary to wait at least 5 seconds after setting the control dial to the 0 position before opening the vaporizer. This allows the pressure to balance and prevents fresh gas and anesthetic agent vapor from escaping out of the vaporizer.**

2. Unscrew the filler cap slowly, so that any pressure in the vaporizer can escape slowly.

3. Check if the names of anesthetic agent and color mark on the vaporizer and the anesthetic agent bottle correspond. If the correct agent is being used, unscrew the cap from the anesthetic agent bottle. Pour anesthetic agent slowly into the filler receiver.

## ⚠CAUTION

- **Take care not to spill anesthetic agent. Inhaling anesthetic agent vapor endangers health.**

4. Check the filling level on the sight glass during filling. The vaporizer must be hanged vertical or stand upright during this check.

   During the filling process, the filling level must not exceed the maximum mark, or there is a risk of incorrect output concentration. If the maximum mark has been exceeded, the agent will flow out .Please drain the excess liquid (see 4.3 Draining the Vaporizer) until the level drops below the maximum mark.

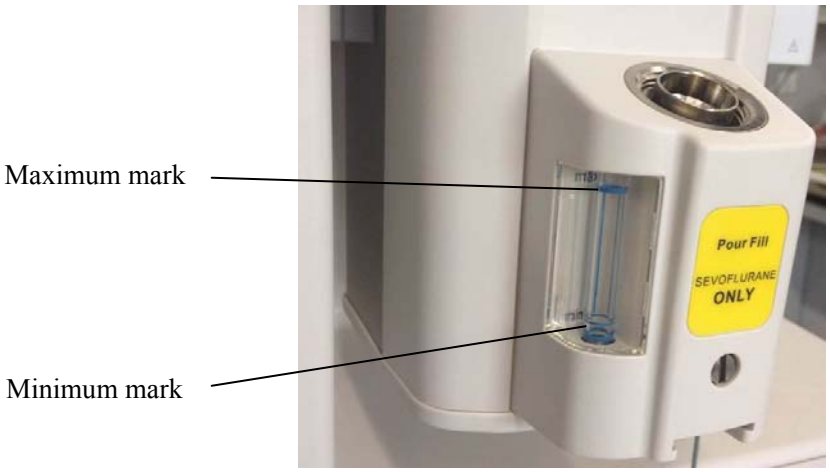


5. When the maximum mark is reached, stop pouring agent. If the vaporizer is filled above the maximum mark by a few millimeters, the anesthetic agent will start to overflow through the overflow hole.

## ⚠CAUTION

- **When the anesthetic vaporizer is overflowed, the anesthetic agent will escape to the environment.**

6. Tighten the filler cap clockwise. If this is not done properly, fresh gas and anesthetic agent may escape when the vaporizer is switched on next time.

7. Tighten the cap of the anesthetic agent bottle even if it is completely empty.

## ⚠WARNING

- **When the filling level of the anesthetic agent is outside the maximum or minimum mark, incorrect output concentration may occur.**
- **Before use, check the filling level of the anesthetic agent.**

## ⚠CAUTION

- **Anesthetic agent vapor will escape into ambient atmosphere if filling operations are not done properly.**

### 4.2.2 Key Filler System

The filling steps of V60 Isoflurane Key Filler Vaporizer and V60 Sevoflurane Pour Fill Vaporizer are the same.
If the vaporizer is connected to the anesthetic delivery system, fresh gas flow can remain as set.

1. Turn the control dial clockwise back to “0” position until the “0” button pops up.

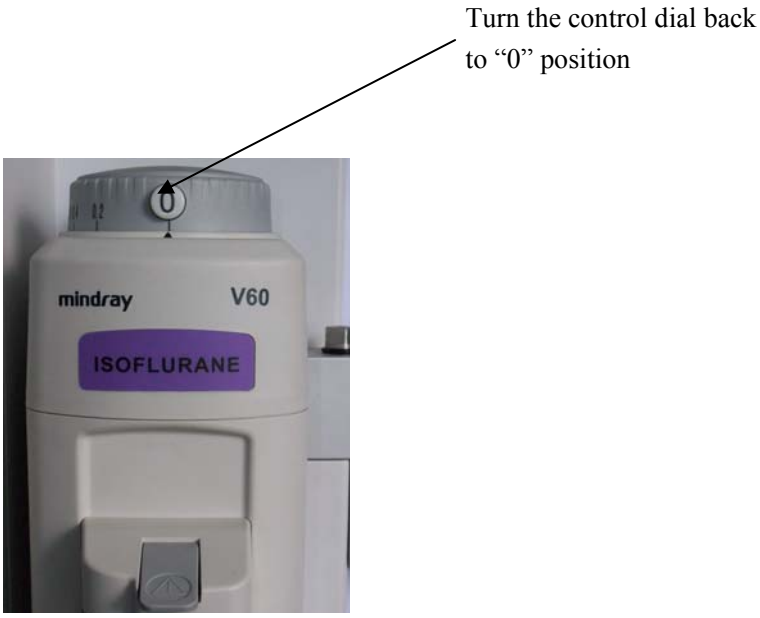


## ⚠WARNING

- **Significant quantities of anesthetic agent vapor may escape if the control dial does not return to “0” position.**

## ⚠CAUTION

- **It is necessary to wait at least 5 seconds after setting the control dial to the 0 position before opening the vaporizer. This allows the pressure to balance and prevents fresh gas and anesthetic agent vapor froming escaping from the vaporizer.**

2. Select the correct filling adapter and anesthetic agent bottle. Screw the filling adapter firmly into the anesthetic agent bottle. Before use, check that the color marks and names/symbols of anesthetic agent on the filling adapter, anesthetic agent bottle and vaporizer must correspond to the anesthetic agent used.

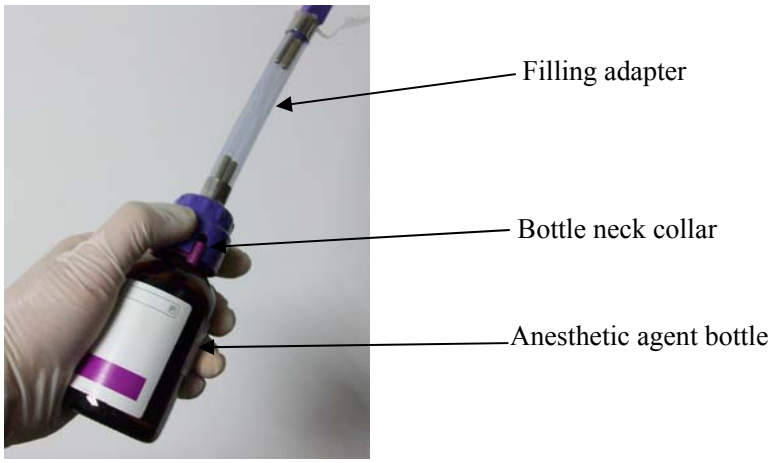


## ⚠WARNING

- **Do not use a damaged filling adapter or an anesthetic agent bottle without collar. If a bottle without collar is used, specific filling adapter cannot be identified, underlying the risk of filling a wrong anesthetic agent.**

## ⚠CAUTION

- **If the connection between the filling adapter and anesthetic agent bottle is not leak-tight, anesthetic agent may escape.**

## NOTE

- **If a new anesthetic agent bottle is partly empty, there may be a leak.**

3. Turn the lock knob counter clockwise.

4. Remove the keyed block.

5. Push the keyed end of the filling adapter into the opening of the filling system until it cannot move.

6. Tighten the lock knob clockwise.

## ⚠CAUTION

- **If the connection between the filling adapter and filling system is not leak-tight, anesthetic agent may escape.**

7. Raise the anesthetic agent bottle upside down slowly.

8. Open the filler control and the liquid agent will flow into the vaporizer.

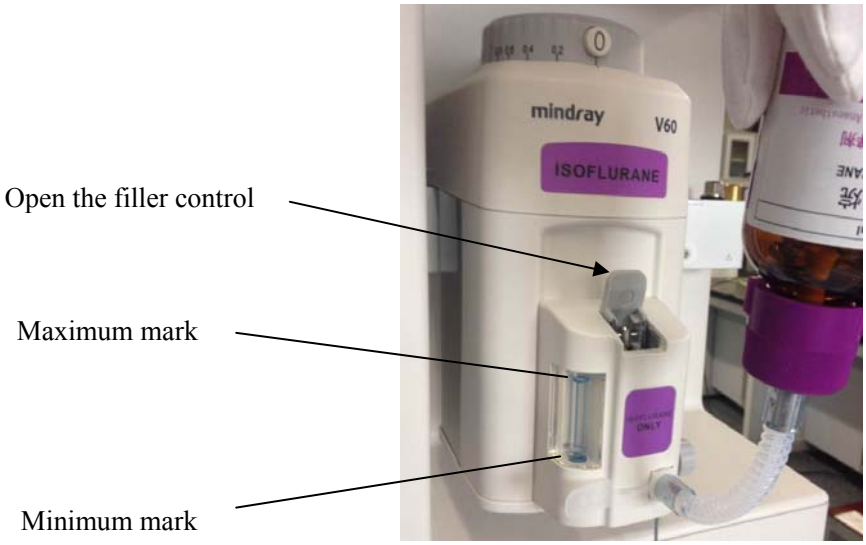


9. Check the filling level in sight glass during filling. When the maximum mark is reached, flow stops automatically.

## ⚠CAUTION

- **If the connection between the filling adapter and anesthetic agent bottle or that between the filling adapter and filling system is not leak-tight, anesthetic agent may continue to flow into the vaporizer.**

10. Close the filler control.
11. Put down the anesthetic agent bottle slowly.
12. Unscrew the lock knob.
13. Pull the keyed end of the filling adapter out of the filling system.
14. Put the keyed block back into the opening of the filling system.
15. Tighten the lock knob.
16. Unscrew the filling adapter.
17. Tighten the cap of the anesthetic agent bottle even if it is completely empty.

## ⚠CAUTION

- **If the connection between the keyed block and filling system is not leak-tight, anesthetic agent may escape, endangering health.**

## NOTE

- **Anesthetic agent bottle must not be stored with filling adapter connected, otherwise anesthetic agent will escape.**
- **During disconnection of the male adaptor from the vaporizer and the bottle adaptor from the bottle, small amounts of anesthetic agent will escape to the environment.**

### 4.2.3 Quik-Fil System

If the vaporizer is connected to the anesthetic delivery system, fresh gas flow can remain as set.

1. Turn the control dial clockwise back to “0” position until the “0” button pops up.

## ⚠WARNING

- **Significant quantities of anesthetic agent vapor may escape if the control dial does not return to “0” position.**

## ⚠CAUTION

- **It is necessary to wait at least 5 seconds after setting the control dial to the 0 position before opening the vaporizer. This allows the pressure to balance and prevents fresh gas and anesthetic agent vapor froming escaping from the vaporizer.**

2. Select the correct filling adapter and anesthetic agent bottle. Remove cap from the anesthetic agent bottle, checking that the bottle and filler mechanism are not damaged. Screw the Quik-Fil adapter firmly into the anesthetic agent bottle.
3. Remove the cap from the anesthetic agent bottle, checking that the bottle and filler mechanism are not damaged.
4. Screw the Quik-Fil adapter firmly into the anesthetic agent bottle.

## ⚠CAUTION

- **If the connection between the filling adapter and anesthetic agent bottle is not leak-tight, anesthetic agent may escape.**
- **Agent-specific filling cannot be assured when bottles without collars used.**

5. Remove the filler cap and insert the bottle equipped with adapter into the filler receptacle. Rotate the bottle gently to align the bottle filler adapter with the slots in the filler receptacle.

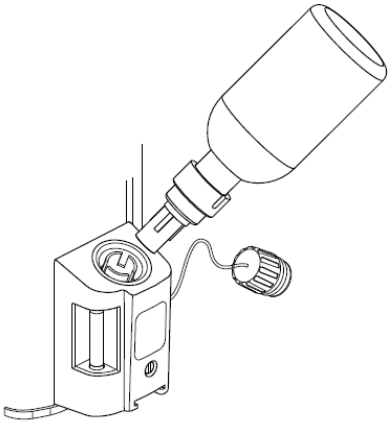

6. Press the bottle until the liquid begins to flow into the vaporizer.

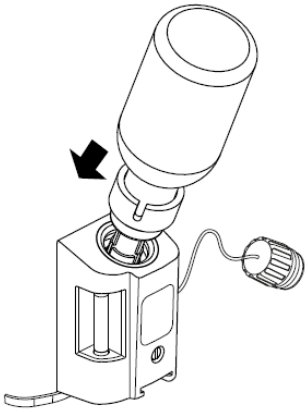

## ⚠CAUTION

- **If the connection between the filling adapter and anesthetic agent bottle is not leak-tight, anesthetic agent may escape.**

7. Check the filling level in sight glass during filling. When the maximum mark is reached, stop pressing the bottle. And pull out the bottle slowly. If the vaporizer is filled above the maximum mark by a few millimeters, the anesthetic agent will start to overflow through the overflow hole.

8. Check that the sealing ring on the filler cap is not damaged, and screw the filler cap.

**⚠CAUTION**

- **Tighten the filler cap. Failure to do so may cause fresh gas and anesthetic agent to escape when the vaporizer is switched on next time.**

9. Unscrew the filling adapter.
10. Tighten the cap of the anesthetic agent bottle even if it is completely empty.

## 4.3 Draining the Vaporizer

**⚠WARNING**

- **Anesthetic agent which has been drained off must be handled, stored or disposed of as medicament. If this is not done, there will be a risk of administering incorrect anesthetic agents.**

**⚠CAUTION**

- **Take care not to spill anesthetic agent. Do not inhale anesthetic agent vapor which endangers health.**

**NOTE**

- **Do not drain liquid anesthetic agent into an open container or significant quantities of anesthetic agent vapor will escape.**
- **Do not reuse the anesthetic agent drained from the vaporizer.**

### 4.3.1 Pour Fill System

The draining steps of V60 Isoflurane Pour Fill Vaporizer and V60 Sevoflurane Pour Fill Vaporizer are the same.

Place the vaporizer upright or suspend so that all the anesthetic agent can drain out.

1. Turn the control dial clockwise back to “0” position until the “0” button pops up.
2. Hold the correct bottle for the anesthetic agent being drained below the drainage outlet at the bottom of the vaporizer.

3. Unscrew the filler cap counter clockwise slowly.

4. Rotate the drainage knob counter clockwise for three to four turns. Drain until no more anesthetic agent can be seen in the sight glass and no more anesthetic agent runs into the bottle. If necessary, close the drainage knob quickly and continue the drainage process with a new bottle. If the anesthetic agent has to be removed from the wick, see ***4.4 Blowing off the Vaporizer***.

## NOTE

- **Do not fill the bottle to the very top. This can lead to escape of anesthetic agent.**

5. When the vaporizer has been completely drained, close the drainage knob clockwise.
6. Tighten the cap of the anesthetic agent bottle even if it is completely empty.
7. Tighten the filler cap.

## ⚠WARNING

- **Tighten the filler cap and drainage knob after draining the vaporizer is completed. Failure to do so may cause anesthetic agent to escape.**

## 4.3.2 Key Filler System

The draining steps of V60 Isoflurane Key Filler Vaporizer and V60 Sevoflurane Pour Fill Vaporizer are the same.

Place the vaporizer upright or suspend so that all the anesthetic agent can drain out.

1. Turn the control dial clockwise back to “0” position until the “0” button pops up.
2. Select the correct anesthetic agent bottle and open the bottle. Do not use a damaged filling adapter or anesthetic agent bottle.
3. Select the correct filling adapter for the anesthetic agent.
4. Screw the filling adapter firmly into the anesthetic agent bottle.

**⚠CAUTION**

- **If the connection between the filling adapter and anesthetic agent bottle is not leak-tight, anesthetic agent may escape, endangering health.**

5. Turn the lock knob counter clockwise.

6. Remove the keyed block.

7. Push the keyed end of the filling adapter into the opening of the filling system until it cannot move.

8. Tighten the lock knob clockwise.

## ⚠CAUTION

- **If the connection between the filling adapter and filling system is not leak-tight, anesthetic agent may escape.**

9. Keep the anesthetic agent bottle below the vaporizer. Open the filler control to drain until no more anesthetic agent can be seen in the sight glass and no more anesthetic agent runs into the bottle. If anesthetic agent bottle should be replaced, close the filler control. Take out the filling adapter. Repeat step 4 after a new anesthetic agent bottle is replaced.

10. Close the filler control.
11. Unscrew the lock knob.
12. Pull the keyed end of the filling adapter out of the filling system.
13. Put the keyed block back into the opening of the filling system.
14. Tighten the lock knob.
15. Unscrew the filling adapter.
16. Tighten the cap of the anesthetic agent bottle even if it is completely empty.

## ⚠WARNING

- **Close the filler control and tighten the lock knob after draining the vaporizer is completed. Failure to do so may cause anesthetic agent to escape.**

## NOTE

- **Anesthetic agent bottle must not be stored with filling adapter connected, or anesthetic agent will escape.**
- **During disconnection of the male adaptor from the vaporizer and the bottle adaptor from the bottle, small amounts of anesthetic agent will escape to the environment.**

## 4.3.3 Quik-Fil System

Place the vaporizer upright or suspend so that all the anesthetic agent can drain out.

1. Turn the control dial clockwise back to “0” position until the “0” button pops up.
2. Remove the cap from an empty Sevoflurane anesthetic agent bottle. Screw the Quik-Fil adapter firmly into the anesthetic agent bottle. Insert the drainage funnel. Depress the drainage funnel and rotate the bottle simultaneously until it cannot move.

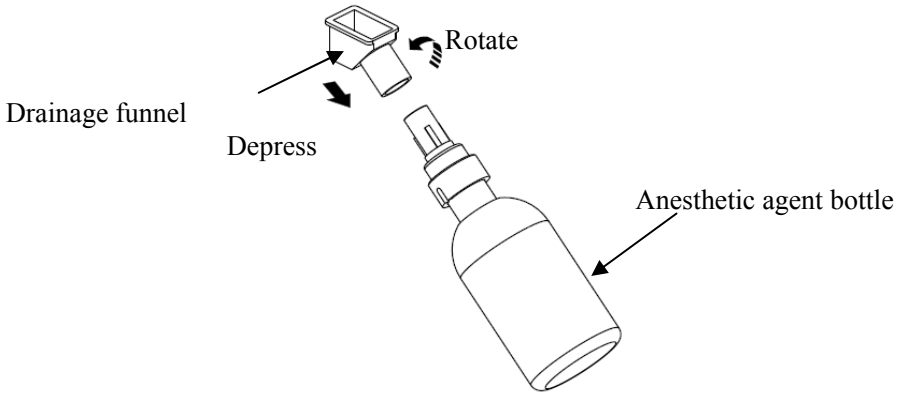


### ⚠CAUTION

- **If the connection between the filling adapter and anesthetic agent bottle is not leak-tight, anesthetic agent may escape, endangering health.**

3. Insert the bottle equipped with Quik-Fil drainage funnel into the slot at the bottom of the vaporizer.

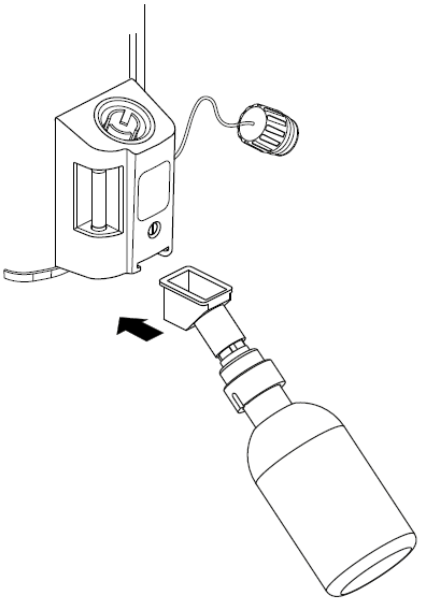

4. Unscrew the filler cap counter clockwise slowly, so that any pressure in the vaporizer can escape slowly.

**NOTE**

- **Do not fill the bottle to the very top. This can lead to escape of anesthetic agent.**

5. Rotate the drainage knob counter clockwise for three to four turns by the filler cap or the key of drainage funnel. Drain until no more anesthetic agent can be seen in the sight glass and no more anesthetic agent runs into the bottle. If necessary, close the drainage knob in good time and continue the drainage process with a new bottle.
6. Close the drainage knob clockwise.
7. Tighten the filler cap.
8. If the anesthetic agent has also to be removed from the wick, see ***4.4 Blowing off the Vaporizer***.

**⚠WARNING**

- **Tighten the filler cap and drainage knob after draining the vaporizer is completed. Failure to do so may cause anesthetic agent to escape when the vaporizer is switched on next time.**

9. Unscrew the drainage funnel and adapter from the bottle.
10. Tighten the cap of the anesthetic agent bottle even if it is completely empty.

## 4.4 Blowing off the Vaporizer

If the anesthetic agent has also to be removed from the wick after draining, set the control dial to 5% and flush for 5 hours at 5 L/min Air or for 2 hours at 10 L/min Air to allow gas to flow into the waste gas scavenging system.

# 5 Checks before Use

## 5.1 Checklist—checks before each use

Use the vaporizer within the specified operating range.

### ⚠WARNING

- **Under no circumstances should the vaporizer ever be used at atmospheric pressure and temperature at which the anesthetic agent could start to boil, as the concentration delivered will rise and be uncontrolled. For more information, see 11.3 Influence of Temperature.**
- **This Anesthetic Vaporizer is not suitable for use in an MRI environment.**

Prepare the anesthetic delivery system in accordance with Instructions for Use and connect the waste gas scavenging system. Switch on the anesthetic agent monitor. Set the correct anesthetic agent and alarm limits. Switch on the oxygen and $CO_2$ monitor and set the alarm limits.

### ⚠WARNING

- **The Anesthetic Vaporizer may become unstable if the unit is tilted beyond 10 degrees.**
- **If a vaporizer is operated at an angle of more than 30° (fixed position), uncontrolled concentrations may occur. Connections, plug-in connectors/plug-in adapters may leak when used at greater angles.**
- **The filling level shown in the sight glass will not be correct when the vaporizer is used at an angle. This may lead to overfilling.**

## NOTE

- **We recommend using monitors which can differentiate between different anesthetic agents for continuous monitoring to prevent deviations in concentration, leaks or incorrect filling from injuring the patient.**
- **When using Low Flow and Minimal Flow, the concentration of the anesthetic agent may deviate significantly from the vaporizer setting. For this reason, measurement of inspiratory and/or expiratory anesthetic agent concentration is essential.**
- **We recommend monitoring oxygen concentration continuously and setting at least a low alarm limit to detect insufficient oxygen supply.**

# 5.2 Setting Checks

1. The filling level in the sight glass should be between the minimum and maximum marks.
2. Filling system:

   Pour Fill/Quik-Fil: Put the filler cap in place and tighten it securely. Tighten the drainage knob securely.

   Key Filler: Close the filler control and tighten the lock knob securely.
3. Connector system:

   Plug-in connector on anesthesia machine: Press the plug-in adapter level on the seals.

   Handle for locking lever: Swing the handle for locking lever counter clockwise. Check if the vaporizer is secure and is hanging vertical on the machine, when viewed from front and side.

   Other connectors: The vaporizer is connected firmly and securely on the anesthetic delivery system.

## ⚠CAUTION

- **Check as per the above items. If these are not done, fresh gas and anesthetic agent vapor may escape endangering health.**

4. If several vaporizers are connected at a time, check that the interlock systems on the vaporizers and anesthetic delivery system are of same type.

   Check the interlock system of each vaporizer as follows:

   1) Switch off fresh gas.

2) Set one vaporizer to any concentration.

3) Turn the control dials of other vaporizers. All other vaporizers must be switched off and impossible to switch on.

4) Switch off the vaporizer. Set the control dial to “0” position.

## ⚠WARNING

- **When the anesthetic delivery system has three and more than three groups of plug-in connectors, check if there is an interlock function between nonadjacent connectors. Otherwise, vaporizers are recommended to be connected right next to each other.**
- **Check as per the above items. If these are not done, an incorrect concentration may be displayed.**
- **Interlock device malfunction may cause several vaporizers to be switched on simultaneously which endangers the patient by resulting in overdosing or a mixture of anesthetic agents.**

6. Check that the vaporizer, connector, and fresh gas circuit are leak-tight (see Instructions for Use for Anesthetic delivery system).
7. Flush the breathing system with fresh gas before connecting a patient.

## ⚠WARNING

- **Do not operate the vaporizer until all checks have been carried out and the results meet the requirements.**
- **All repairs must be carried out by qualified service personnel.**

**FOR YOUR NOTES**

# 6 Basic Operations

## ⚠CAUTION

- **Handle the vaporizer with care. Be careful not to tilt or drop.**
- **Stop using the vaporizer immediately if it has been tilted or dropped.**
- **Do not carry by the control dial or locking lever handle.**
- **Before operation, check that the locking lever is capable of locking the vaporizer securely onto the manifold.**
- **Only use Anesthetic Vaporizer with anesthetic delivery systems that are suitable according to ISO80601-2-13.**
- **If the Anesthetic Vaporizer is connected to anesthetic delivery systems from other manufacturers, it is the responsibility of the operator to ensure that all technical specifications of the Anesthetic Vaporizer and the anesthetic delivery systems are met.**

## 6.1 Connecting the Vaporizer

1. The interlock device must be in the original position.

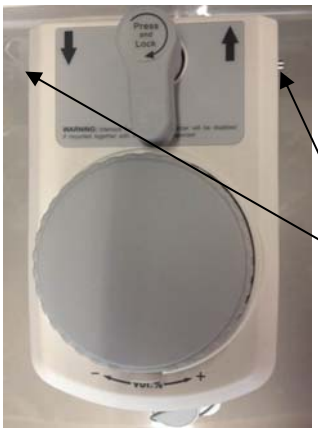


Interlock device in the original position.

2. The sealing rings on the anesthesia machine plug-in connector must be undamaged. There should be no foreign bodies on the plug-in connector.

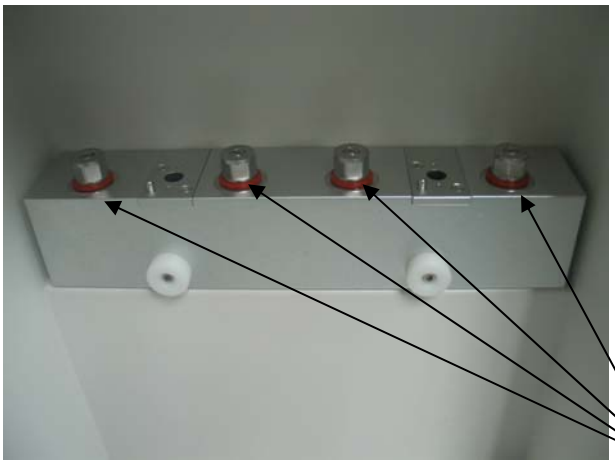


3. Switch the vaporizers off when one or more than one vaporizers have been on the manifold of the anesthetic delivery system, before hanging on another vaporizer.
4. Set the control dial to “0” position.

5. Hold the vaporizer in vertical position with both hands and lower gently onto the anesthesia machine plug-in connector.

6. Depress the handle for locking lever and turn it for 90° clockwise. The vaporizer is then secured and cannot be removed.

Locking lever in locked position

7. Connect two or more than two vaporizers on the anesthetic delivery system:

■ If the anesthetic delivery system has two groups of plug-in connectors, the interlock pins of the two connected vaporizers must be contact directly.

Direct contact

- When the anesthetic delivery system has three and more than three groups of plug-in connectors, check if there is an interlock function between nonadjacent connectors. Otherwise, vaporizers are recommended to be connected right next to each other.

### ⚠WARNING

- **The plug-in adapter must be level and stable on the sealing rings. Otherwise, there may be a loss of fresh gas, leaks, excessively low output concentrations or the interlock device may jam. To solve this problem, disconnect the vaporizer first (see 6.4 Disconnecting the Vaporizer) and check the positions of locking lever and vaporizer manifold of the anesthetic delivery system. Then re-connect the vaporizer.**

### NOTE

- **Take care when lowering the Vaporizer onto the plug-in connector**

## 6.2 Adjusting the Concentration of Anesthetic Agent

### ⚠WARNING

- **Before operation, check that the control dial turns normally.**
- **Do not use the vaporizer tilted for an angle of more than 30°(fixed position). Risk of incorrect output concentration or escape of anesthetic agent may result otherwise.**

1. Set the flow of fresh gas on the anesthetic delivery system.
2. Press the “0” button.
3. Turn the control dial counter clockwise to the required concentration of anesthetic agent.

## NOTE

- **If the concentration cannot be set, do not force the control dial. Check that all other vaporizers connected are in "0" position and that the interlock device is operational.**
- **Stop use of the vaporizer if the control dial gets loose or falls off.**

During use, check the filling level in the sight glass regularly. The filling level is not visible between the minimum and maximum marks then do not use the vaporizer. When the vaporizer is empty or overfilled then the output concentration can be incorrect. When the minimum mark is reached, fill the vaporizer (see ***4.2 Filling the Vaporizer***).

1. If the anesthetic agent monitor shows implausible values, check the vaporizer for incorrect filling and check the monitor for incorrect setting.

## NOTE

- **During prolonged operation with both a high flow of fresh gas and a high concentration, the concentration administered may decrease. See *11.8 Influence of Running Time*.**

## ⚠CAUTION

- **Jerky movements or tilting at an angle of more than 30° can cause incorrect output concentration.**
- **Equip with anesthetic gas scavenging system which complies with ISO80601-2-13 to purify the air of the operating room.**

2. If it is necessary to change to another vaporizer:

   (1) Set the vaporizer being used to "0".

   (2) Disconnect the vaporizer being replaced (see ***6.4 Disconnecting the Vaporizer***).

   (3) Switch the anesthetic agent monitor to the new anesthetic agent (If necessary, refer to the agent monitor instruction for use).

   (4) Connect the new vaporizer (see ***6.1 Connecting the Vaporizer***).

## 6.3 Switching off the Vaporizer

1. Turn the control dial clockwise until the “0” button pops out to prevent it from being switched on accidentally.
2. If required, turn off the fresh gas flow on the anesthetic delivery system.

### ⚠WARNING

- **The vaporizer must never be left switched on without fresh gas flow. Otherwise anesthetic agent vapor at a high concentration can get into the machine circuit and ambient air and harm people and materials.**

3. If the vaporizer is not going to be used for up to six months, then the anesthetic agent inside the vaporizer should be drained.
4. If the vaporizer remains on the anesthetic delivery system:
   (1) The locking lever on the plug-in adapter should remain locked on.
   (2) Keep within the permissible temperature and humidity range.
   (3) Observe use-by date of the anesthetic agent.
5. If the vaporizer has to be removed from the anesthetic delivery system, see ***6.4 Disconnecting the Vaporizer*** and ***6.5 Moving when Filled***.

## 6.4 Disconnecting the Vaporizer

### ⚠CAUTION

- **Take care not to drop the vaporizer. Do not use the vaporizer if it has been dropped. Damage may cause incorrect output concentration. Do not carry by the control dial or locking lever handle to avoid the risk of injury.**
- **Disconnect the vaporizer only when the control dial is set to “0” to avoid the risk of incorrect output concentration and of anesthetic agent escaping.**
- **Place vaporizers only on firm even surfaces or hang on stable brackets.**

1. Turn the control dial back to “0” position clockwise.
2. Turn the handle for locking lever for 90° counter clockwise until it springs up automatically.
3. Use both hands to lift the vaporizer off the anesthesia machine.

## NOTE

- **If there are no valves on the anesthesia machine plug-in connectors, fresh gas and anesthetic agent vapor may escape when the vaporizer is removed.**

## 6.5 Moving when Filled

This operation is only to be done as part of normal operation, not for storage and transport.

1. The anesthetic delivery system can be moved at the workplace with the vaporizer switched on.

## NOTE

- **Jerky movements or tilting at an angle of more than 30° can cause incorrect output concentration.**

2. The anesthetic delivery system with securely fastened vaporizers can be moved with control dial set at "0", if there is no risk of tilting by more than 30° .

## ⚠WARNING

- **When tilted at an angle of more than 30° :**

  **The anesthetic agent may overflow when the control dial is set at "0", endangering health.**

  **When the control dial is set above "0", the anesthetic agent may leak and get into the flow control system and cause excessively high or low concentrations when the vaporizer is used next time.**

3. When the vaporizer is detached from the anesthetic delivery system and transported separately, the control dial must remain at the "0" position.

**FOR YOUR NOTES**

# 7 Cleaning and Disinfecting

### ⚠WARNING

- **Obey applicable safety precautions.**
- **Read the material safety data sheet for each cleaning agent.**
- **Read the operation and service manual before disinfecting the Anesthetic Vaporizer.**
- **Wear gloves and safety glasses.**

### NOTE

- **To help prevent damage, refer to the manufacturer's data if you have questions about a cleaning agent.**
- **Do not permit liquid to go into the Anesthetic Vaporizer housings.**

## 7.1 Cleaning

1. Clean the surface of the vaporizer housing with a damp cloth soaked in water, or green soap tincture (The pH value is 7.0 to 10.5)
2. After cleaning the housing, remove the remaining detergent by wiping with a dry lint free cloth.

### ⚠WARNING

- **Do not immerse the Anesthetic Vaporizer or the filling adapter in detergents.**
- **The detergent must not be allowed to get under the control dial.**
- **Do not allow the detergent to get into the gas inlet, gas outlet, or filling system.**

### ⚠CAUTION

- **If liquids other than the anesthetic agents specified for the vaporizer get into the vaporizer, the patient may be injured.**

## 7.2 Disinfecting

Use surface disinfectants for disinfection.

- 75% of alcohol
- 70% of isopropyl alcohol
- 2% of glutaraldehyde (neutral)
- Sodium hypochlorite solution (10% available chlorine)
- Super Sani-Cloth (0.5% Quaternary ammonium chloride and 55% Isopropyl alcohol)

**⚠WARNING**

- **Do not sterilize the vaporizer and accessories. Damage inside may cause incorrect output concentration.**

# 8 User Maintenance

## 8.1 Repair Policy

### ⚠WARNING

- **Do not modify or disassemble the vaporizer. Any change of the vaporizer may cause incorrect output concentration.**

Stop using the vaporizer immediately if it has been found to need repair. Contact trained service personnel for repair. After repair, test the vaporizer to ensure that it is functioning properly, in accordance with the specifications.

### NOTE

- **All repairs must be carried out by qualified service personnel.**
- **Replace damaged parts with components manufactured or sold by Mindray. After repair, test the unit to make sure that it complies with the manufacturer's published specifications.**
- **Contact Mindray for service assistance.**

## 8.2 Maintenance Schedule

Test after care and service of the anesthetic delivery system or vaporizer, after prolonged shutdown and at least every six months.

| **Minimum frequency** | **Maintenance** |
|---|---|
| Daily | The control dial can be turned to “0” position.<br>After the “0” button is pressed, the control dial can be turned counter clockwise, close to the highest concentration mark. |
| Weekly | Clean the external surfaces.<br>Check the concentration weekly when continuous monitoring is not available (see section ***8.3 Checking the Concentration***). |
| Biweekly | The vaporizer has no damage or loose parts. |
| During filling and draining | Check the filling system. See section ***8.4 Checking the Filling System***. |
| During cleaning and installation | Check the anesthesia machine plug-in connectors. See section ***8.5 Checking the Plug-in Adapter***.<br>The gas inlet and outlet are not soiled. |
| Semiyearly and after service | All-round checks of ***8 User Maintenance*** should be performed by trained service personnel. |

**⚠CAUTION**

- **Do not pour water or any cleaning solutions into the vaporizer.**

## 8.3 Checking the Concentration

Check the vaporizer output concentration weekly when continuous monitoring is not available

1. Preparation
   (1) Fill the vaporizer—at least half full between minimum and maximum marks.
   (2) Use a valid anesthetic agent monitor.
   (3) Connect the monitor to the common gas outlet of the anesthesia machine. Make sure that the connections are leak-tight.
   (4) Connect the waste gas scavenging system and start operation.
   (5) Set the monitor to anesthetic agent being used and to continuous measurement.
   (6) Set air flow of 2 L/min on the anesthesia machine. Use $O_2$ if Air is not available.

2. Measuring

(1) Check the output concentration at “0” position, 0.4, 1, 2, 3, 5, and MAX in ascending order.

(2) Correct measured values, according to the carrier gas..

Air check: no correction.

$O_2$ check: reduce the measured values as follows:

| **Measured value vol%** | **Correction** |
|---|---|
| <1% | -0.05 |
| 1.0-2.0 | -0.10 |
| 2.0-4.0 | -0.20 |
| 5.0-8.0 | -0.30 |

If the data displayed is in % partial pressure, no correction is made. If it is in vol.%, it needs to be converted to partial pressure. The formula is:

$$\text{Concentration (\% partial pressure)} = \frac{\text{Measured value (vol.\%) x atmospheric pressure (kPa)}}{\text{101.3 kPa}}$$

3. Determine the accuracy range.

| **Range of concentration accuracy (maximum value always applies)** | | |
|---|---|---|
| **Operating environment** | **15 to 35℃ or 0.2 to 10 L/min** | **10 to 15℃ or 35 to 40℃ or 10 to 15 L/min** |
| Set concentration ≤6% | ±0.20 vol.% or ±20% rel., whichever is greater | +0.30/-0.20 vol.% or +25/-20% rel., whichever is greater |
| Set concentration > 6% | ±0.25 vol.% or ±20% rel., whichever is greater | +0.35/-0.25 vol.% or +30/-20% rel., whichever is greater |

4. Test result

If the corrected measured value is within the permissible range of output concentration, the vaporizer can be put into operation.

## ⚠CAUTION

- **If the corrected measured value is not within the permissible range of output concentration, do not use the vaporizer. Have the vaporizer checked by trained service personnel.**

5. After test

   (1) Switch off the vaporizer. Set the control dial to “0” position.

   (2) Switch off Air or $O_2$ flow on the anesthesia machine.

## 8.4 Checking the Filling System

Verify the following：

■ Pour Fill system

1. The sealing ring for filler cap is in good condition.
2. The filling opening is clean.
3. The sight glass shows normal liquid level.

■ Key Filler system

1. The sealing cushion for filling device is in good condition.
2. Only the correct filling adapter fits into the filling system.
3. The filler control can be opened and closed smoothly.
4. The sight glass shows normal liquid level.

■ Quik-Fil system

1. The sealing ring for filler cap is in good condition.
2. The filling opening is clean.
3. The valve core inside the filling opening can be depressed and retracts smoothly.
4. The sight glass shows normal liquid level.

## 8.5 Checking the Plug-in Adapter

Verify the following：

1. When the Handle for locking lever is turned to locking position, turns back automatically.
2. The locking lever is undamaged and not buckled.
3. The interlock device is undamaged, guides easily and cannot be removed.
4. Two interlock pins are present.
5. Sealing areas are undamaged.
6. Manufacturer’s plate on the back of the vaporizer is present and secure.

# 9 Troubleshooting

## 9.1 Operation Related Faults and Remedies

| Fault | Cause | Remedy |
|---|---|---|
| No concentration delivered or concentration excessively high/low | The vaporizer liquid level is below the minimum mark. | Fill the vaporizer. |
| | The control dial is set to “0”. | Set the control dial to ≥0.2 vol.%. |
| | No vaporizer is connected;<br>Or several vaporizers are connected, but unintended vaporizer is switched on. | Connect the vaporizer;<br>Or switch off the unintended vaporizer. |
| | The vaporizer is tilted during or before operation when the control dial is not at “0”. If this has happened, liquid anesthetic agent may have entered the flow control system. | Before operation: flush the vaporizer with fresh gas. See sections ***4.3 Draining the Vaporizer*** and ***4.4 Blowing off the Vaporizer***. Then check the concentration. See section ***8.3 Checking the Concentration***. |
| | Leak, for example, plug-in adapter is not fitted flush on seals. | Disconnect the vaporizer. Check plug-in adapter safety locking device and sealing rings. Have them repaired by trained service personnel if damage is found. |
| | Valves in the anesthesia machine plug-in connectors are damaged. | Repair by trained service personnel. |
| | The vaporizer temperature is outside the specified application range, such as filled with very cold anesthetic agent, or operated with both flow and concentration high over a prolonged period. | Allow the vaporizer to reach normal temperature, allowing at least 15 min per ℃ deviation from the specified range. See section ***11.3 Influence of Temperature***. Refill with anesthetic agent at room temperature. |
| | The vaporizer is operated with carrier gas other than air. | Change the concentration because of carrier gas. See section ***11.5 Influence of Gas Composition.*** |
| | The monitor displays volume percentage, not partial pressure. | Convert the measured value to partial pressure. See section ***8.3 Checking the Concentration***. |
| | The vaporizer or anesthetic monitor is defective. | Check with another vaporizer to establish whether the vaporizer or anesthetic monitor is faulty. Repair by trained service personnel if the |

| | | |
|---|---|---|
| | | vaporizer is defective. |
| | The vaporizer is incorrectly installed or the plug-in adapter is damaged. | If necessary, re-install the vaporizer or have it repaired by trained service personnel. |
| The vaporizer detection system on anesthetic delivery system displays anesthetic agent which is different from the vaporizer. | A different anesthetic agent has just been used and high concentrations of it are still present in the breathing system. | Flush the breathing system or wait for gas to change. |
| | The monitor settings have not been changed after anesthetic agent has been changed. | Change monitor settings. |
| The control dial cannot be set to concentration. | Interlock jams or another vaporizer is still switched on. | Switch off other vaporizer.<br>For interlock fault, have it repaired by trained service personnel. |
| | The “0” button is not pressed. | Press the “0” button. |
| | The control dial is jammed. | Repair by trained service personnel. |
| The concentration can be adjusted without pressing the “0” button. | The “0” button is defective. | Repair by trained service personnel. |
| Anesthetic agent vapor has leaked during use. | The plug-in adapter is not fitted flush. | Check the anesthesia machine plug-in connector sealing rings and sealing surfaces. Check that the locking lever is not buckled. |
| | The filler cap is not tightened or the sealing ring is defective. | Tighten the filler cap. Repair by trained service personnel if the sealing ring is defective. |
| | Drainage screw is not closed. | Tighten the drainage screw. |
| Filling level cannot be read in the sight glass or incorrect filling level is shown in the sight glass. | The vaporizer is completely empty. | Refill the vaporizer. |
| | The vaporizer is overfilled. | Drain the vaporizer to the maximum mark and check the concentration. |
| | Sight glass display is faulty. | Repair by trained service personnel. |

## 9.2 Filling and Draining Related Faults and Remedies

| Fault | Cause | Remedy |
|---|---|---|
| Anesthetic agent leaks from the drainage outlet. | The drainage knob is not closed. | Close the drainage knob. |
| Anesthetic agent leaks from the filling system. | Seal on the filling system is damaged. | Repair by trained service personnel. |
| Anesthetic agent leaks from overflow. | The vaporizer is filled above the maximum mark. | Drain the vaporizer to the maximum mark and check the concentration. |
| Anesthetic agent does not flow out when drained. | The filler cap is not opened or the drainage outlet is blocked. | Open the filler cap or repair by trained service personnel. |
| Anethetic agent does not flow into anesthetic vaporizer by Key Filler adapter | The inner tube is blocked by liquid | Close the filler control. Unplug the keyed end of filling adapter from the opening of the filling system. And then let the liquid in the inner tube draining into the bottle. |

## 9.3 Plug-in Adapter Related Faults and Remedies

| Fault | Cause | Remedy |
|---|---|---|
| The vaporizer cannot be disconnected. | The interlock device is still engaged. | Disengage the interlock device. |
| The plug-in adapter is not fitted flush on anesthesia machine plug-in connector seals. | Engagement mechanism on the plug-in adapter or plug-in connector is damaged. | Excessive force used may lead to jamming when disconnecting the vaporizer. Contact us immediately. |
| | There is foreign body between the plug-in connector and plug-in adapter. | Remove foreign body. |

**FOR YOUR NOTES**

# 10 Storage and Transport

## 10.1 Storage

Storage for longer than 6 months:

1. Drain and blow off the vaporizer (See ***4.3 Draining the Vaporizer*** and ***4.4 Blowing off the Vaporizer***).
2. Turn the control dial to "0". The vaporizer handle for locking lever and interlock device are in their original positions.
3. If packing is necessary, see ***10.2 Transport***.
4. Observe storage temperature. See ***A Product Specifications***. If storage temperature range is exceeded, internal damage may occur which could cause incorrect output concentration. Before putting into operation again, carry out all-round inspection first.

### NOTE

- **When the anesthetic vaporizer is not in use for a long period of time, use the plug to block the gas inlet and outlet.**
- **If the anesthetic vaporizer is stored in high temperature and then used, the concentration of the delivered anesthetic agent may be high. To enable pressure equalization, always turn the control dial to 1% after connecting the anesthetic workstation, and wait for at least 15 seconds.**

## 10.2 Transport

1. Turn the control dial to “0”
2. Disconnect the vaporizer from the anesthetic delivery system.
3. Drain the vaporizer completely. Then clean and disinfect the vaporizer.
4. Each vaporizer must be packed separately with care. Use original packing when possible.

   If original packing is not available, use strong packing with at least 5 cm of impact-resistant material around each vaporizer. Fasten packing securely.

### ⚠WARNING

- **Do not transport the vaporizer with anesthetic agent filled, or it may cause incorrect output concentration.**

### NOTE

- **Liquid anesthetic agents and filled vaporizers are subject to Hazardous Goods Regulations. These regulations do not apply to the residues of anesthetic agents left in the wick after draining.**

# 11 Theory of Operation

## 11.1 Operating Principle

The following image illustrates the operating principle of the vaporizer.

Control dial position above 0--Vaporizer switched on:

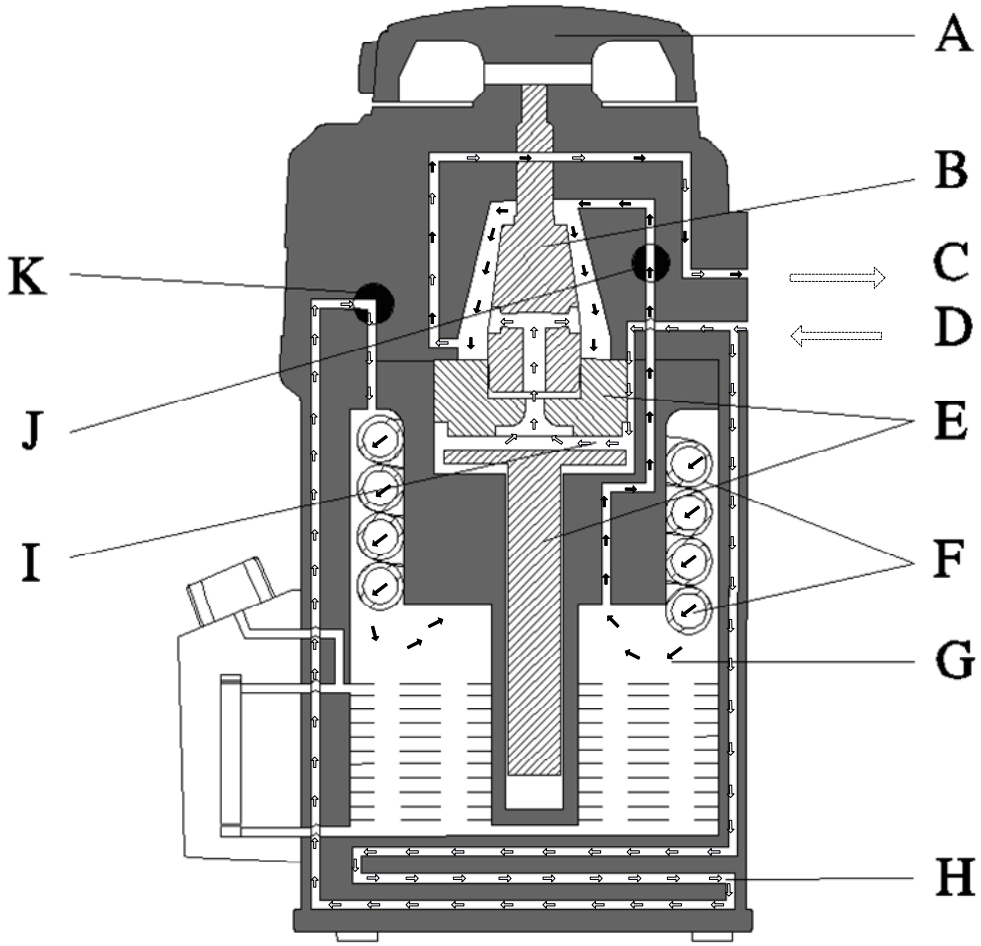


Fresh gas

Fresh gas mixed with anesthetic gas

The fresh gas is routed through valves J and K, which are linked to the control dial A, and through the vaporizing chamber G.

Fresh gas enters by the inlet D. Some of the fresh gas is routed through the vaporizing chamber G, and charged with anesthetic agent in soaked wick F. The rest of the fresh gas is routed past the airway I and through the temperature compensator E.

The two flows are mixed in the space behind the two flow controls (cone valve B), and routed to the outlet C.

The output concentration control of anesthetic agent vapor is important.

1. The concentration is influenced by the temperature compensator E, which makes use of the thermal expansion characteristics of different materials to expand or contract, based on heating or cooling, the airway I. This process compensates for the influence of temperature on the satuation concentration.
2. The pressure compensating system H effectively reduces the pumping effect.

Control dial position at 0—Vaporizer switched off

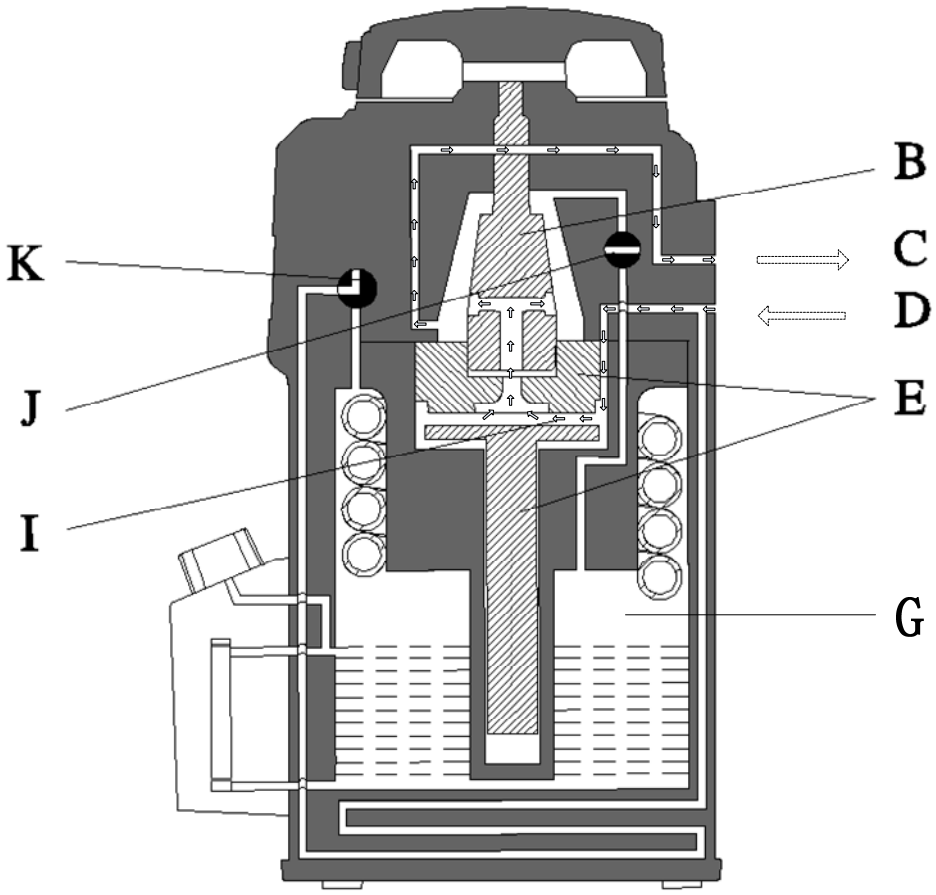


Fresh gas flows from the inlet D to the airway I, and then passes the temperature compensator E and the cone valve B, finally flows out from the outlet C.

The vaporizing chamber G is completely shut off from the gas flow by valves J and K. No anesthetic-agent can escape from the vaporizing chamber G.

## 11.2 Calibration

Every vaporizer is individually set at 22℃ and at a continuous air flow of 2 L/min without ventilation pressure, and tested at 22℃ as well as 2 L/min.

Calibration is in % partial pressure as the depth of anesthesia depends on the patient's uptake which is itself determined by partial pressure. Concentration delivered in % partial pressure at normal pressure of 101.3 kPa is identical numerically with the output given in volume percent, so the scale values on the control dial of the vaporizer given in vol.%, shows the concentration delivered at 22℃ with dry gases (see ***A Product Specifications***).

The output in vol.% must be corrected for other atmospheric pressure values (see ***11.6 Influence of Atmospheric Pressure***) but partial pressure always remains constant.

For simplicity, settings on the vaporizer and in the Operator's Manual are given in the abbreviated form of vol.%, which means vol.% at 101.3 kPa.

## 11.3 Influence of Temperature

The saturation concentration of the anesthetic agent rises as temperature rises. The concentration deviation is automatically compensated by routing a higher proportion of the gas flow through the vaporizer bypass system.

The linear change of the bypass valve changes the flow through the bypass in a non linear manner .For the full temperature range, the non linear manner does not match perfectly the non linear variation of the partial pressure, so that the vaporizer cannot fully compensate the concentration deviation resulting from changes in temperature and the concentration delivered remains slightly dependent on temperature.

**⚠WARNING**

- **Under no circumstances should the vaporizer ever be used at atmospheric pressure and temperature at which the anesthetic agent could start to boil, as the concentration delivered will rise and be uncontrolled.**

As altitude increases, the boiling point falls.

| **Atmospheric pressure/altitude** | **101.3 kPa**<br>**0 m** | **90 kPa**<br>**1000 m(≈3280 ft)** | **80 kPa**<br>**2000 m(≈6560 ft)** | **70 kPa**<br>**3000 m(≈9840 ft)** |
|---|---|---|---|---|
| Isoflurane | 48.5℃ | 45.4℃ | *42.2℃ | *38.9℃ |
| Sevoflurane | 58.6℃ | 53.4℃ | 52.1℃ | 48.7℃ |
| Enflurane | 56.5℃ | 53.4℃ | 50.3℃ | 46.8℃ |
| Halothane | 50.2℃ | 46.8℃ | *43.4℃ | *39.8℃ |

* Note: Isoflurane and halothane cannot be used under these conditions.

Differences in temperature between the vaporizer and the atmosphere within the temperature range are compensated automatically so that the output concentrations are within the specified concentration accuracy. If the temperature of the vaporizer before use is outside 10 to 40℃, a time of 15 min/℃ has to be allowed for temperature adjustment so that the concentration remains within the accuracy specified.

When the vaporizer is being operated with a high gas flow or a high concentration, the anesthetic agent inside will cool down gradually which results in drop in the output concentration (see ***11.8 Influence of Running Time***).

The diagrams show typical temperature dependence when operating with a 2 L/min flow of Air. If temperature is not within this range, the deviations are shown as following figures, despite continuing compensation:

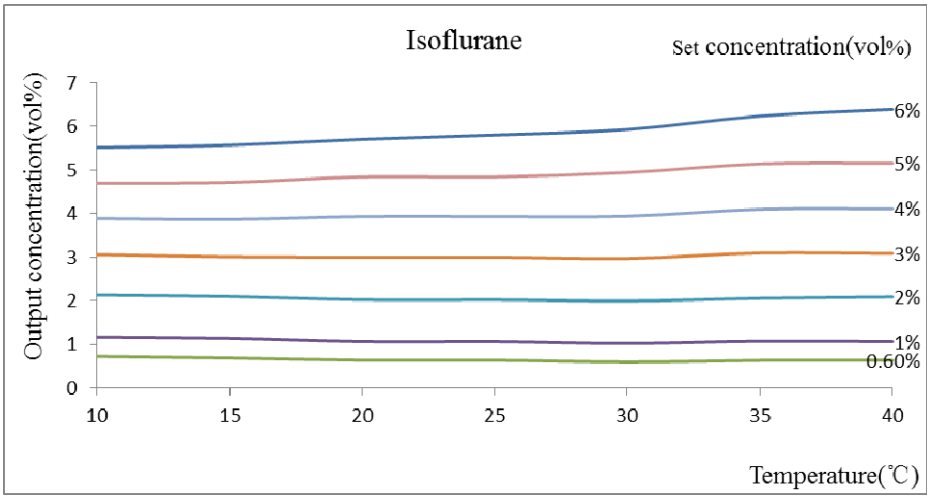

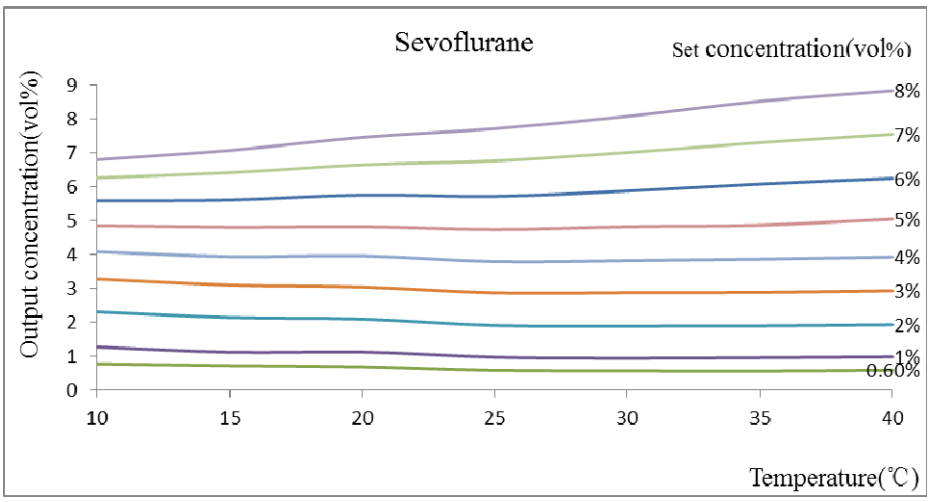
Sevoflurane
Set concentration(vol%)
Output concentration(vol%)
9
8
7
6
5
4
3
2
1
0
8%
7%
6%
5%
4%
3%
2%
1%
0.60%
10
15
20
25
30
35
40
Temperature(℃)

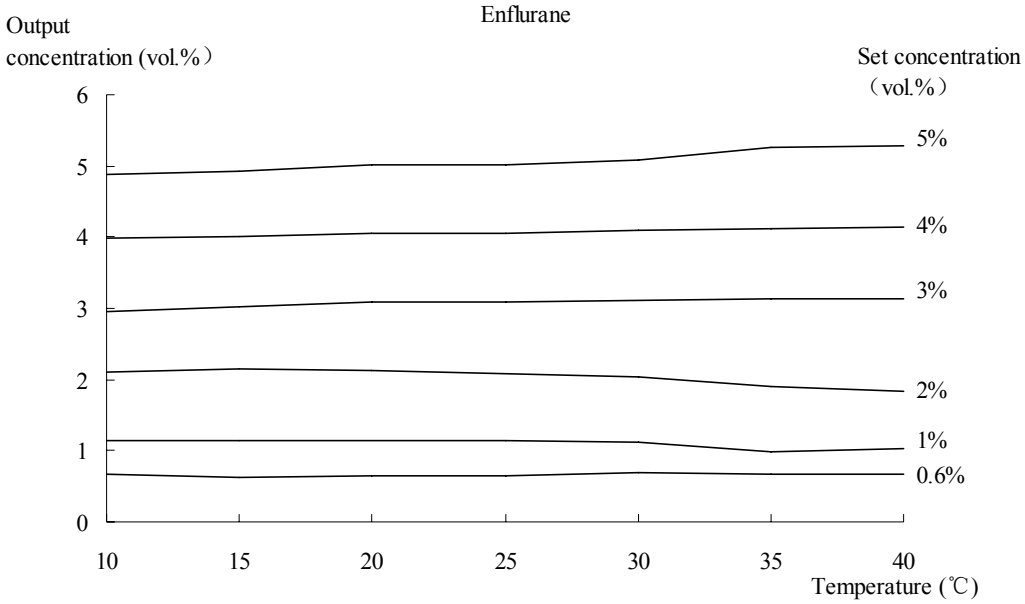
Enflurane
Output
concentration (vol.%)
Set concentration
(vol.%)
6
5
4
3
2
1
0
5%
4%
3%
2%
1%
0.6%
10
15
20
25
30
35
40
Temperature (℃)

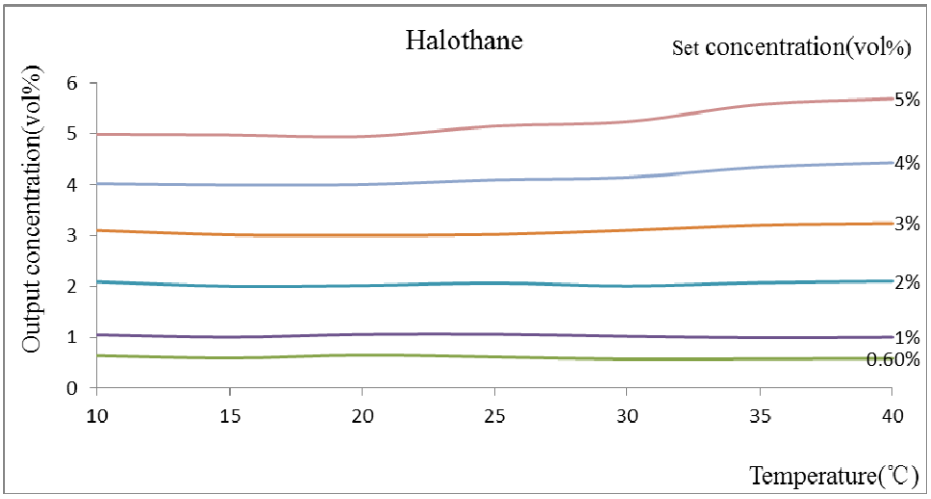
Halothane
Set concentration(vol%)
Output concentration(vol%)
6
5
4
3
2
1
0
5%
4%
3%
2%
1%
0.60%
10
15
20
25
30
35
40
Temperature(℃)

## 11.4 Influence of Flow

Within the specified flow range, the concentration delivered by the vaporizer is only slightly dependent on the fresh gas flow.

In case of high fresh gas flow or high concentration, full compensation is not made for the cooling of the anesthetic agent because total saturation of the gas flowing through the liquid vaporizing system does not occur and the output concentration is reduced slightly (see ***11.8 Influence of Running Time***).

The diagrams show the influence of flow on the concentration delivered after 1 minute at 22℃, 101.3 kPa when operating with Air.

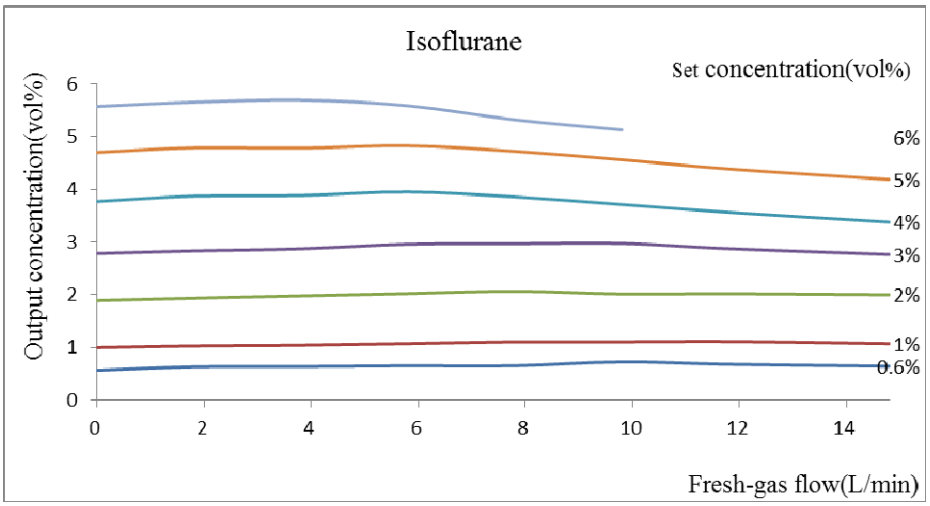


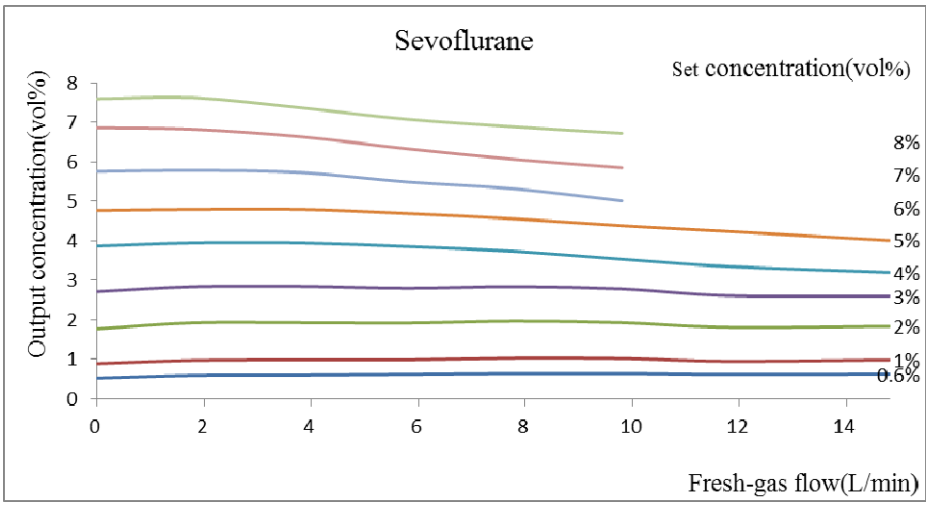

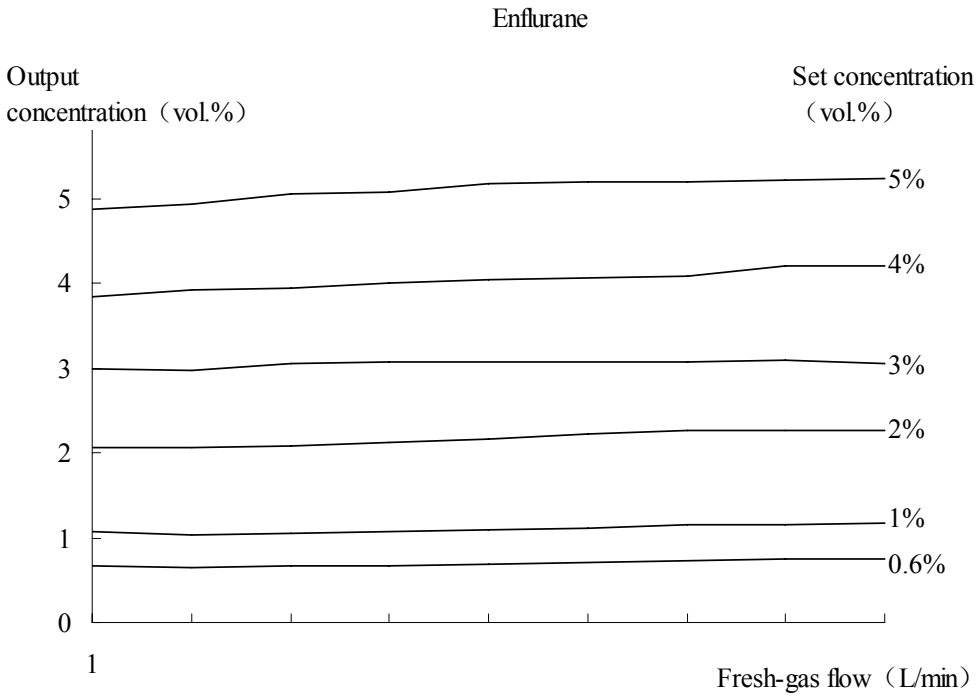
Enflurane
Output concentration（vol.%）
Set concentration（vol.%）
5
4
3
2
1
0
5%
4%
3%
2%
1%
0.6%
1
Fresh-gas flow（L/min）

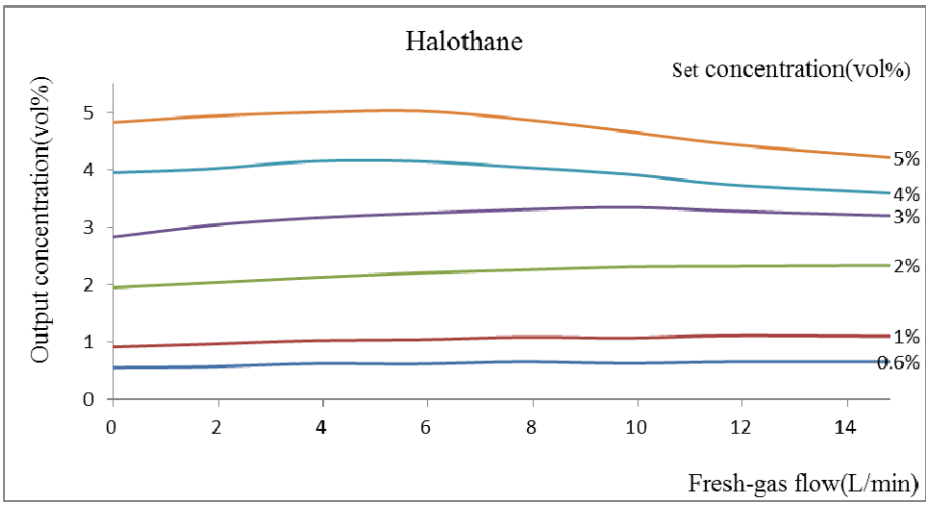
Halothane
Set concentration(vol%)
Output concentration(vol%)
5
4
3
2
1
0
5%
4%
3%
2%
1%
0.6%
0
2
4
6
8
10
12
14
Fresh-gas flow(L/min)

## 11.5 Influence of Gas Composition

The concentration delivered by the vaporizer is dependent on the composition of the fresh gas since the viscosity and density of the gas changes from one gas to another. The vaporizer is calibrated with Air because the concentration delivered is then exactly in the middle of the range for the anesthetic gas mixtures available.

When 100% $O_2$ is used, the output concentration compared with Air rises by 10% of the set value and by not more than 0.5vol.%.
When a mixture of 30% $O_2$ and 70% $N_2O$ is used, the concentration falls by 10% of the set value at most, and by not more than 0.5vol.%.

The effect of gas composition is different for different anesthetic agents and, for this reason, maximum effects are given here.

When changing from one gas mixture to another, an additional dynamic effect can occur which may result in a further deviation in concentration until any earlier fresh gas is flushed out of the vaporizer.

These deviations and their duration will all be greater under the following circumstances:

1. The lower the volume of anesthetic agent in the vaporizer;
2. The higher the concentration set;
3. The lower the gas flow;
4. The more extreme the change of gas type.

The extent of this dynamic deviation increases as gas flow increases, though the duration of the deviation will decrease.

The following diagram shows the influence of gas composition on output concentration when carrier gas is set to 1 vol.%.
If the humidity of gas is higher than that specified in appendix A “Product Specifications”, the output concentration will be affected slightly.

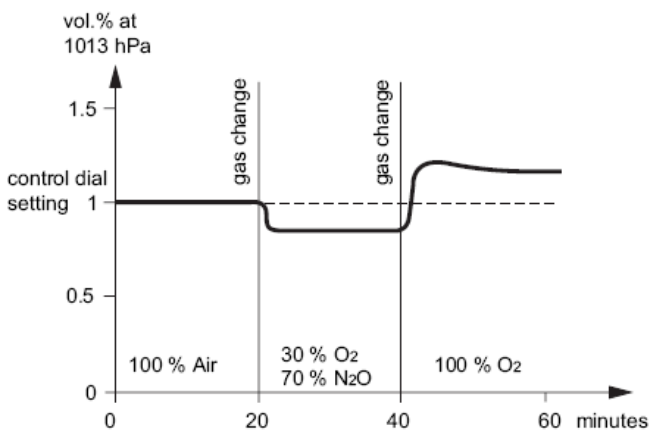

## 11.6 Influence of Atmospheric Pressure

The anesthetic agent partial pressure delivered by the vaporizer is all but independent of atmospheric pressure, so that weather-based fluctuations do not need to be taken into account and altitude-based pressure changes in the range 70 to 106 kPa will only lead to small deviations within the accuracy specified. For this reason, the physiological effect within the specified anesthetic agent concentration of the vaporizer is independent of atmospheric pressure.

When measuring the output concentration of the vaporizer in partial pressure, there is no influence of ambient pressure. When measuring in volume percent, the measured values do, however, change with atmospheric pressure and the measured values rise, when atmospheric pressure falls below 101.3 kPa.

The following formula for conversion applies:

$$\text{Concentration (\% partial pressure)} = \frac{\text{Measured value (vol.\%) x atmospheric pressure (kPa)}}{\text{101.3 kPa}}$$

**⚠WARNING**

- **Under no circumstances should the vaporizer ever be used at atmospheric pressure and temperature at which the anesthetic agent could start to boil, as the concentration delivered will rise and be uncontrolled.**

## 11.7 Influence of Fluctuations in Pressure

During ventilation, pressure fluctuations on the anesthetic vaporizer can cause a higher concentration to be delivered than is shown on the control dial setting.

The vapor in the vaporizing chamber is compressed when pressure rises, and it expands when pressure falls. If this effect is strong enough, small quantities of saturated vapor will be pumped backwards through the inlet of the vaporizing chamber into the fresh gas. This is described as the pumping effect. The higher the ventilation pressure and ventilation frequency, the more rapid the fall in pressure during expiration. The lower the fresh gas flow, the smaller the quantity of anesthetic agent in the vaporizer, the more obvious the pumping effect. The compensation system of the vaporizer will reduce these effects.

## 11.8 Influence of Running Time

Evaporation of the anesthetic agent during operation cools the vaporizer slowly. The saturation concentration of the anesthetic agent in the vaporizer decreases more rapidly the longer the duration of operation, the higher the concentration set and the higher the fresh gas flow selected, i.e. when more anesthetic agent evaporates with time.

Temperature compensation counters this effectively and limits deviations in the concentration delivered. After a certain period of operation, the vaporizer stabilizes at a slightly lower temperature and an output concentration which is a slight deviation from the set value.

The accuracy given in ***A Product Specifications*** applies as long as the temperature of the vaporizer does not fall outside the operating range.

The diagrams show typical concentration curves over 4 hours and 6 hours of running time respectively, measured at 22℃ and 101.3 kPa.

A. Fresh gas flow of 4 L/min, concentration set of 1%, running time of 4 hours.

B. Fresh gas flow of 10 L/min, concentration set of 1%, running time of 6 hours.

C. Fresh gas flow of 4 L/min, concentration set of 3%, running time of 6 hours.

D. Fresh gas flow of 4 L/min, concentration set of 6%, running time of 4 hours;

E. Fresh gas flow of 1 L/min, concentration set of 6%, running time of 6 hours.

F. Fresh gas flow of 4 L/min, concentration set of 5%, running time of 4 hours.

G. Fresh gas flow of 1 L/min, concentration set of 5%, running time of 6 hours.

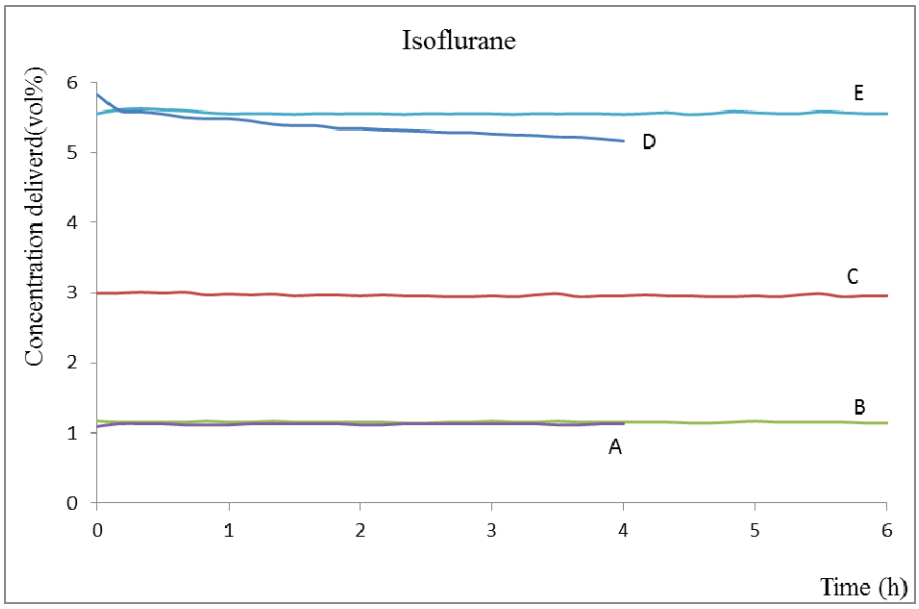

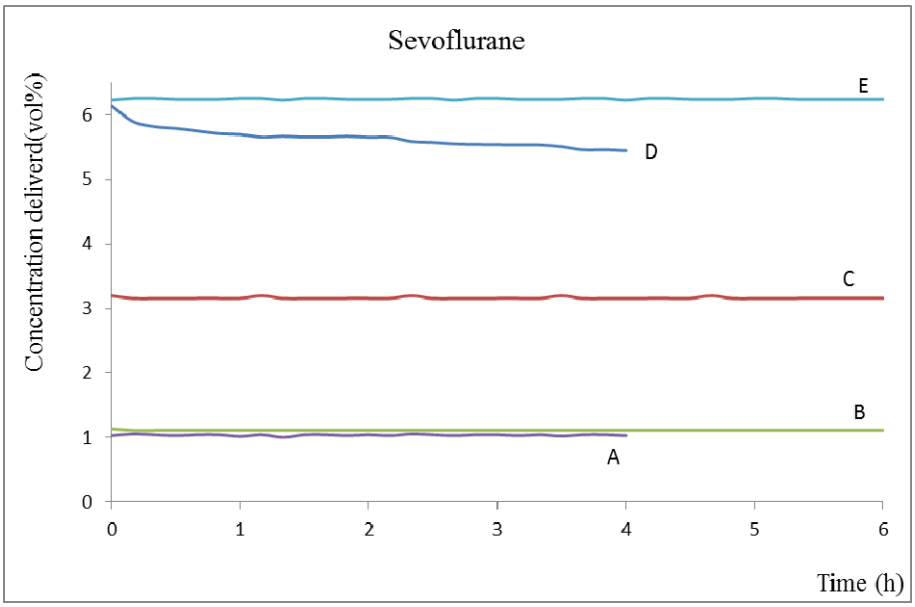
Sevoflurane
Concentration deliverd(vol%)
6
5
4
3
2
1
0
0
1
2
3
4
5
6
E
D
C
B
A
Time (h)

Enflurane

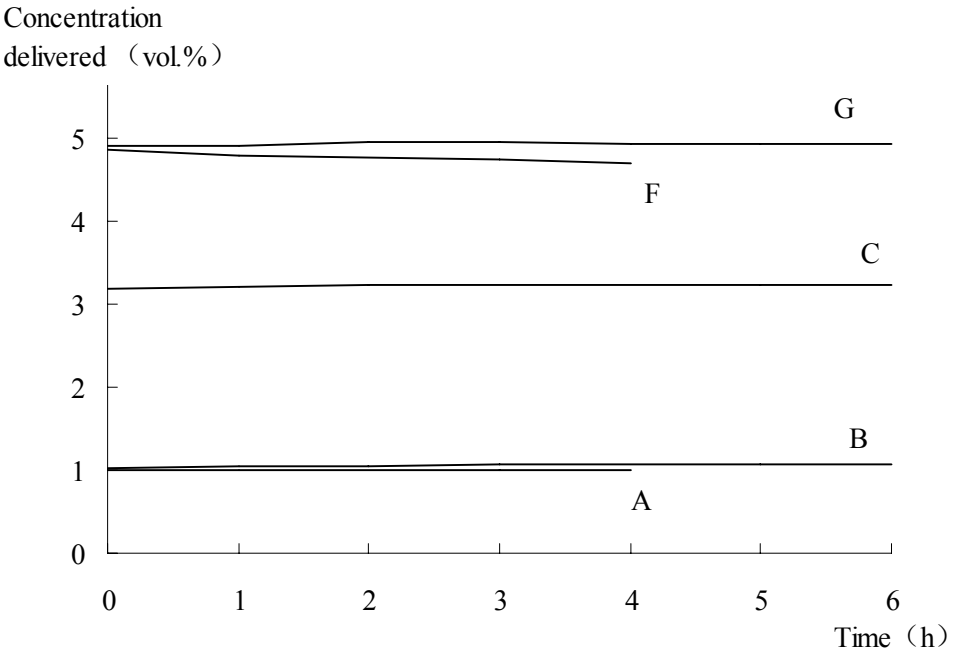
Concentration
delivered （vol.%）
5
4
3
2
1
0
0
1
2
3
4
5
6
G
F
C
B
A
Time（h）

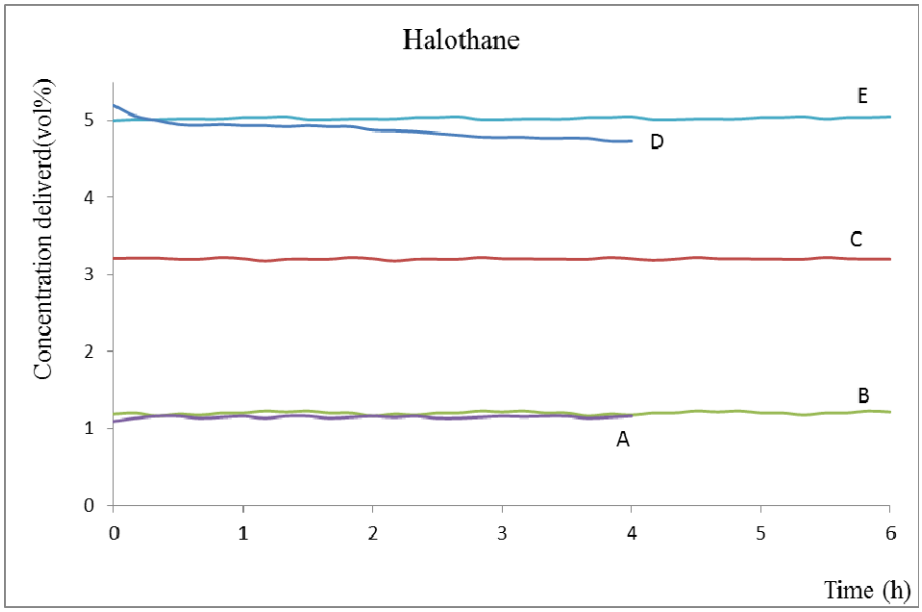
Halothane
Concentration deliverd(vol%)
5
4
3
2
1
0
0
1
2
3
4
5
6
Time (h)
E
D
C
B
A

# A Product Specifications

## A.1 Standards Compliance

The Anesthetic Vaporizer is in compliance with the following industry standards.

| | |
|---|---|
| EN ISO 14971 /ISO 14971 | Medical devices-Application of risk management to medical devices |
| EN 1041 | Information supplied by the manufacturer with medical devices |
| EN ISO15223-1/ISO15223-1 | Medical devices-Symbols to be used with medical device labels, labeling and information to be supplied |
| EN ISO 5360 /ISO 5360 | Anaesthetic vaporizers - Agent-specific filling systems |
| EN 62366/IEC62366 | Medical devices - Application of usability engineering to medical devices |
| / | COUNCIL DIRECTIVE 93/42/EEC of 14 June 1993 concerning medical devices |
| EN 60601-1/IEC 60601-1 | Medical electrical equipment -- Part 1: General requirements for basic safety and essential performance |
| EN 60601-1-6: | Medical electrical equipment -- Part 1-6: General requirements for basic safety and essential performance - Collateral standard: Usability |
| EN 980 | Symbols for use in the labelling of medical devices |
| ISO 80601-2-13 | Medical electrical equipment --Part 2-13:Particular requirements for basic safety and essential performance of an anaesthetic workstation |

## A.2 Physical Specifications

| | |
|---|---|
| Weight | 6 ± 0.5kg (empty) |
| Dimensions | Height: 235 mm±10mm<br>Width: 235 mm±10mm<br>Depth: 200 ±10 mm |
| Filling volume | 360 ml (dry wick)<br>300 ml (moist wick)<br>260 ml (between the minimum and maximum marks) |

## A.3 Operating Range

| **Temperature** | |
|---|---|
| During operation | 10 to 40℃ |
| During storage (empty) | -20 to 60℃ |
| During transport (empty) | -20 to 60℃ |
| **Humidity** | |
| During operation | 15 to 95%, non-condensing |
| During storage | 10 to 95%, non-condensing |
| **Atmospheric pressure** | |
| During operation and shut-down (filled, control dial at “0” position) | 70 to 106 kPa |
| During storage (empty) | 50 to 120 kPa |
| **Concentration range** | |
| Isoflurane | 0 to 6% |
| Sevoflurane | 0 to 8% |
| Enflurane | 0 to 5% |
| Halothane | 0 to 5% |

## A.4 Performance Specifications

| **Range of concentration accuracy (maximum value always applies)** | | |
|---|---|---|
| **Operating environment** | **15 to 35℃ or 0.2 to 10 L/min** | **10 to 15℃ or 35 to 40℃ or 10 to 15 L/min** |
| Set concentration ≤6% | ±0.20 vol.% or ±20% rel., whichever is greater | +0.30/-0.20 vol.% or +25/-20% rel., whichever is greater |
| Set concentration > 6% | ±0.25 vol.% or ±20% rel., whichever is greater | +0.35/-0.25 vol.% or +30/-20% rel., whichever is greater |

| **Maximum angle of tilt** | |
|---|---|
| Alone, freestanding | $10^{o}$ |
| During operation (fixed position) | $30^{o}$ |

| **Pressure difference** | |
|---|---|
| Difference between pressure range and ambient pressure on the vaporizer outlet | -10 to 10 kPa |

## A.5 Product Configurations

| Filling system | | | |
|---|---|---|---|
| | **Key Filler** | **Quik-Fil** | **Pour Fill** |
| Isoflurane vaporizer | Yes | No | Yes |
| Sevoflurane vaporizer | Yes | Yes | Yes |
| Enflurane vaporizer | Yes | No | Yes |
| Halothane vaporizer | Yes | No | Yes |

## A.6 Flow Range

| **Flow Range** |
|---|
| 0.2 to 15 L/min<br>0.2 to 10 L/min for concentrations > 5 Vol.% |

**FOR YOUR NOTES**

# B Accessories List

The anesthetic vaporizer should work with the following accessories.

| Description | PN |
|---|---|
| **Filling adapter** | |
| Key Filler filling adapter for enflurane vaporizer | 040-000064-00 |
| Key Filler filling adapter for isoflurane vaporizer | 040-000065-00 |
| Key Filler filling adapter for sevoflurane vaporizer | 040-000066-00 |
| Key Filler filling adapter for halothane vaporizer | 040-000063-00 |
| **Draining adapter** | |
| Quik-Fil drainage funnel for sevoflurane vaporizer | 040-000067-00 |

**FOR YOUR NOTES**

# C Symbols and Terminology

## C.1 Symbols

| Symbol | Description |
|---|---|
| - | minus |
| % | percent |
| / | per；divide；or |
| ≈ | about |
| ～ | to |
| ^ | power |
| ＋ | plus |
| ＝ | equal to |
| ＜ | less than |
| ＞ | greater than |
| ≤ | less than or equal to |
| ≥ | greater than or equal to |
| ± | plus or minus |
| × | multiply |
| © | copyright |

## C.2 Terminology

| Terminology | Description |
|---|---|
| Air | Medical compressed air |
| $N_2O$ | Medical nitrous oxide |
| $O_2$ | Medical oxygen |
| TM | Trademark |
| ® | Registered trademark |
| Vol.% | Percentage by volume of anesthetic agent in fresh gas at outlet. Unit of output concentration. |
| % | Percentage |
| %rel | Relative deviation from value in % |
| ℃ | Degree Celsius, unit of temperature |

| | |
|---|---|
| ° | Degree, unit of plane angle |
| Kg | Kilogram, unit of mass |
| kPa | Kilopascal, unit of pressure |
| hPa | Hundred Pascal, unit of pressure |
| Pa | Pascal, unit of pressure |
| pH | Hydrogen ion concentration |
| Ml | Milliliter, unit of volume |
| L/min | Liter per minute, unite of flow |
| Min | Minute, unit of time |
| H | Hour, unit of time |
| M | Meter, unit of length |
| Mm | Millimeter, unit of length |
| EN | European Norm |
| ISO | International Organization for Standardization |
| Iso | Isoflurane |
| Sev | Sevflurane |
| Enf | Enflurane |
| Hal | Halothane |
| Pour Fill | While filling, fill anesthetic agent into the filler directly. While draining, open the draining valve by specific key to drain the anesthetic agent into the anesthetic agent bottle. |
| Key Filler | Adopt filling adapter and bottle neck collar to connect to the anesthetic agent bottle, to operate filling and draining anesthetic agent. |
| Quik-Fil | While filling, adopt filling adapter to connect the anesthetic agent bottle and filler together. While draining, turn on draining valve by specific key, and adopt draining adapter and drainage funnel to connect the anesthetic agent bottle and the anesthetic vaporizer to drain anesthetic agent. |